MRH—A、B系列(标准库存品)
MRH-A,B series(Standard Products)

●尺寸表 Dimension table

公称型号的构成 Model number notation

MRH 06 02 A — 300 R 300 N2

①　②　③　④　⑤　⑥　⑦　⑧

①螺母类型符号
②丝杠轴公称外径(mm)
③导程(mm)
④法兰形状
A：2孔 …… 仅φ6mm产品
B：4孔
⑤螺纹部长度(mm)
⑥螺纹旋向(仅右旋)
⑦丝杠轴总长(mm)
⑧螺母个数
(例：N2表示带2个螺母　带1个螺母时无符号)

①Nut model
②Screw Shaft nominal diameter(mm)
③Lead(mm)
④Flange configuration
A：2 holes …… Only products with φ6mm
B：4 holes
⑤Screw thread length(mm)
⑥Thread direction(Right-hand only)
⑦Screw Shaft total length(mm)
⑧Number of Nut
(Example：N2 means 2 Nuts on a Shaft. There is no notation when 1 Nut.)

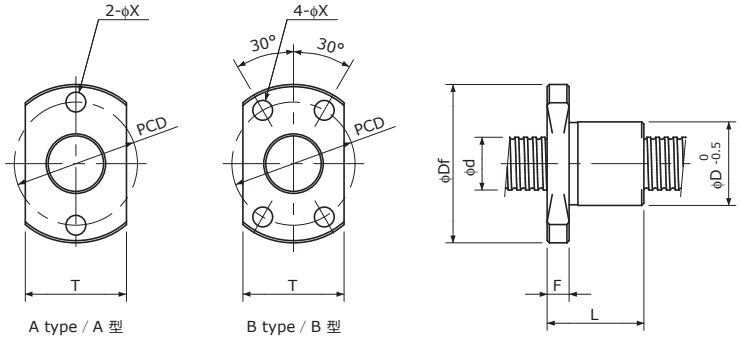

A type / A 型　　B type / B 型

Unit(单位)：mm

Model 型号	Screw Shaft 丝杠轴				Nut 螺母								Standard Shaft length 标准轴长
	Dia. 公称直径 d	Lead 导程	Root dia. 底径	No. of threads 螺纹条数	D	L	Df	F	P.C.D	X	Nut type 螺母类型	T	
MRH0602A	6	2	5.1	1	10	14	20	3	15	3.1	A	10	300
MRH0606A		6	5.2	2									
MRH0609A		9	5.3	4									
MRH0802B	8	2	6.6	1	13	16	26	4	20	3.6	B	17	400
MRH0805B		5	6.6	2									
MRH0808B		8	6.7	2									
MRH0812B		12	6.7	4									
MRH1002B	10	2	8.6	1	15	20	28		22			19	500
MRH1006B		6	8.4	2									
MRH1010B		10	8.4	2									
MRH1015B		15	8.4	4									
MRH1020B		20	8.7	4									
MRH1202B	12	2	10.6	1	18	24	31		25			20	600
MRH1206B		6	10.4	2									
MRH1210B		10	10.4	2									
MRH1220B		20	10.4	6									
MRH1230B		30	10.4	8									

注1)建议由本公司进行丝杠轴的追加加工。
如果由其他公司进行追加加工，本公司将不能保证追加加工后的精度，敬请谅解。
注2)如果由其他公司进行追加加工，加工时请将螺母从丝杠轴上拆下，并在加工后用清洁的精制煤油将附着在丝杠轴上的污垢等清洗干净。
注3)请将丝杠轴的轴端直径指定为不超过丝杠轴底径，并以1mm为单位指定丝杠长度。
注4)螺纹旋向仅为右旋。
注5)丝杠轴、螺母不单售。

Note 1)Additional machining of Screw Shafts should be performed by KSS. Note that accuracy cannot be guaranteed if additional machining is performed by someone other than KSS.
Note 2)When additional end-journal machining is performed by someone other than KSS, always remove the Nut from the Screw Shaft. After machining, wash away any debris on the Screw Shaft with clean refined kerosene or similar material.
Note 3)The Shaft end diameter should be smaller than the Screw Shaft Root diameter, and the Screw thread length should be specified in 1mm.
Note 4)Only Right-hand thread is available.
Note 5)Screw Shafts and Nuts are not sold separately.