Standard Products

KSS has several varieties of standard products as follows. It is possible to make quick delivery to customers by using standard products.

●Precision Ball Screws

SG series(Precision Ball Screws)

- Configuration of fixed side end-journal is standardized, supported side end-journal is free type and standard travel is set up.
- Since supported side end-journal is unfinished, it is possible to do additional end machining with your requested thread length.
- There are C3(Axial play 0), C5(Axial play 5μm or less) available.

SD series(Bi-directional Ball Screws)

- These are economical Ball Screws because a shaft has bi-directional thread.
- Since fixed and supported side end-journal are unfinished, design flexibility is enlarged.
- There are C3(Axial play 0), C5(Axial play 5μm or less) available.

●Rolled Ball Screws

SR series(Rolled Ball Screws)/SSR series(Stainless Rolled Ball Screws)

- Standard and reasonable price products by Rolling formed process.
- Since fixed and supported side end-journal are unfinished, design flexibility is enlarged.
- There are Ct7(Axial play 20μm or less), Ct10(Axial play 50μm or less) available.
- There are also Rolled Ball Screws made of stainless steel(SSR series) in stock.

SRT

SSRT

SRT series(Rolled Ball Screws with integrated end-journal)
SSRT series(Stainless Rolled Ball Screws with integrated end-journal)

- Fixed side end-journal is set up bigger than Shaft nominal diameter and unfinished.
- More design flexibility compared to current Rolled Ball Screws.
- It is possible to design end-journal configuration compatible with SG series.
- There are also Integrated end-journal Rolled Ball Screws made of stainless steel(SSRT series) in stock.

●Precision Rolled Ball Screws

PSR series(Precision Rolled Ball Screws)
PSRT series(Precision Rolled Ball Screws with integrated end-journal)

- KSS newly developed the high grade accuracy (JIS C5) Rolled Ball Screws, which surpasses the conventional type of Ct7 or Ct10 grade.
- PSR series with unfinished end-journal and PSRT series with integrated end-journal are in stock, so wide variety of design choices are available.
- The axial play is set at 5um or less, but zero backlash is possible by your request.
- For integrated type, fixed side end-journal is standardized and finished, KSS Compact Support Unit can be installed.

●Additional end-journal machining

Technology of KSS end-journal machining enables to keep high accuracy of Ball Screws after re-works. Please ask for end-journal machining to us. Precautions of end-journal machining are as follows.

1) We recommend additional end-journal machining is done by KSS. We do not guarantee accuracy after re-works done by other than KSS.

2) When additional end-journal machining other than standard configuration in catalogue is requested, please send us drawing with end-journal profile on it.

3) Additional machining is not applied to the Nut. Please design flange configuration according to our dimension table.

4) Lubrication
In Ball Screws use, lubricant should be applied on them.
KSS Ball Screws are in vacuum wrapping with anti-rust oil due to purpose for long term stock.
If you need specified lubricant, we will supply Ball Screws with lubricant you requested when requesting additional end-journal machining.
Since anti-rust oil is not lubricant, anti-rust oil should be washed off from the Ball Screw with clean Kerosene and apply lubricant (Grease or lubricating oil).
Please check the lubricant condition every 2 or 3months. If grease is contaminated, remove old grease, and replace with the new one.

5) Ball Nut falling by weight
If Ball Screw is not preloaded, Ball Nut will fall down due to its own weight. Care must be taken.

6) Additional end-journal machining by customer
Additional end-journal machining done by customer is out of our guarantee, but in case of unavoidably conducting, please take caution regarding above precautions as well as following points.

- Invasion of dust inside Nut
Care must be taken regarding invasion of dust inside Nut when additional end-journal machining.
If additional end-journal machining is being done to the Shaft with Ball Nut, wrap the Nut with vinyl, sealing up both ends and surely protect it from dust.

- Nut removal
In case of Nut removal, please use dummy shaft shown in Fig. A-21. We can supply dummy shaft with products if you request.
Make sure Balls and Screw Shaft groove are meshing correctly and remove the Nut slowly as well as re-assembling.

- Cleaning after additional end-journal machining
After additional end-journal machining, Ball Screws should be washed dust off with clean Kerosene.

- Applying lubrication
After additional end-journal machining, apply lubricant before using Ball Screw.

- Storage
After additional end-journal machining, surely conduct anti-rust treatment when Ball Screws are in long term stock.

Fig. A-21 : Dummy shaft and Nut removal

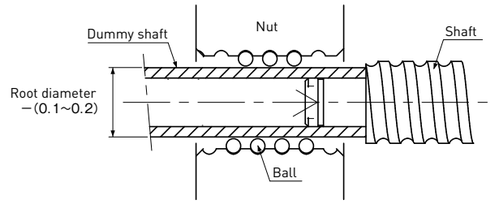

SG series Standardized Precision Ball Screws

Precision Ball Screws which are accuracy C3, C5 and have machined shaft end at fixed side in advance are available. Short delivery is available by machining supported end in accordance with customer's request.

●Combination of Shaft nominal dia. & Lead

Unit : mm

Shaft dia. \ Lead	0.5	1	2	2.5	4	5	6	8	10	12	15	20
3	A207	A208										
4		A209	A210									
5					A211							
6		A212	A213	A214			A215		A216			
8		A217	A218	A219	A220	A221		A222	A223	A224		A225
10		A226	A227		A228	A229			A230		A231	
12			A232						A233			
14			A234		A235							
15						A236			A237			A238

Note 1) The number in a table : showing a page in this catalogue.

●Accuracy Grade & Axial play

Accuracy grade of SG series (Standardized Precision Ball Screws) are based on C3 and C5(JIS B 1192-3).
According to accuracy grade, Axial play 0(Preload : C3) and 0.005mm or less (C5) are in stock.

●Material & Surface hardness

SG series (Standardized Precision Ball Screws) consists of Shaft and Nut materials SCM415 (Carburizing and quenching) and Surface hardness is HRC58~62.

●Lubrication

SG series (Standardized Precision Ball Screws) without end-journal machining will be applied with anti-rust oil for rust prevention.
Anti-rust oil does not have lubricating function so that please apply Grease or lubrication oil when using the Ball Screws.
If there is no specific instruction, KSS would recommend our original Grease (MSG No.2) as standard lubricant.
Please feel free to contact us.

●Customized products

It will be a customized product other than the above. Please ask KSS.

●Model number notation

Please use model number below when additional end-journal machining is requested.

SG	04	01	—	046	R	085	C3	B	1	X
①	②	③		④	⑤	⑥	⑦	⑧	⑨	⑩

①Ball Screws Series No.
②Screw Shaft nominal diameter(mm)
③Lead(mm)
④Screw thread length(mm)
(Specify in 1mm unit after end-journal machining)
⑤Thread direction(R=Right-hand)
⑥Screw Shaft total length(mm)
(Specify in 1mm unit)
⑦Accuracy grade(C3 or C5)
⑧Shaft supported end profile
Refer to Fig. A-22 below : A-type,B-type,C-type, D-type(other)
⑨Anti-rust oil or Lubricant
0 : KSS grease (MSG No.2)
1 : Anti-rust oil(Non Ruster PZ2)
2 : Multemp PS2 grease
3 : Other
⑩Nut Flange direction (Refer to Fig. A-23 below)

Fig. A-22 : Shaft supported end profile

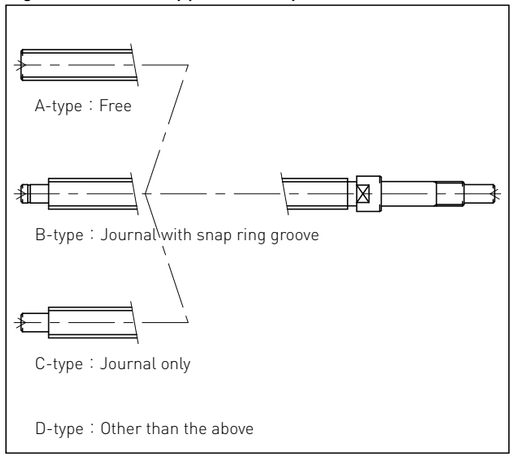

Fig. A-23 : Nut Flange direction

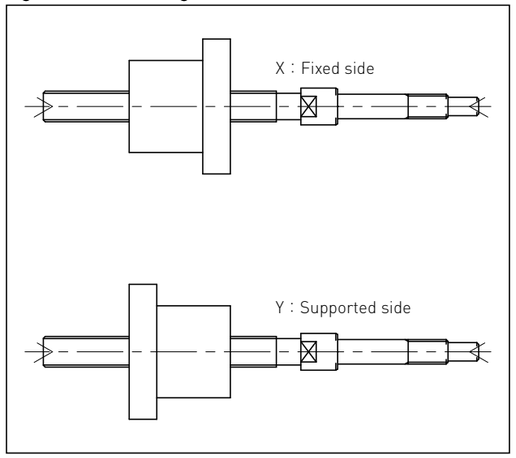

●Note

1) The detail of end-journal dimension for each size is shown from next page.
2) KSS does not make additional Nut machining.
3) The specification is subject to change without notice.
4) If the other configuration except (A,B,C) is requested, please contact KSS.

Standard products in stock SG series

SG0300.5 | Shaft dia. φ3 Lead 0.5mm | C3

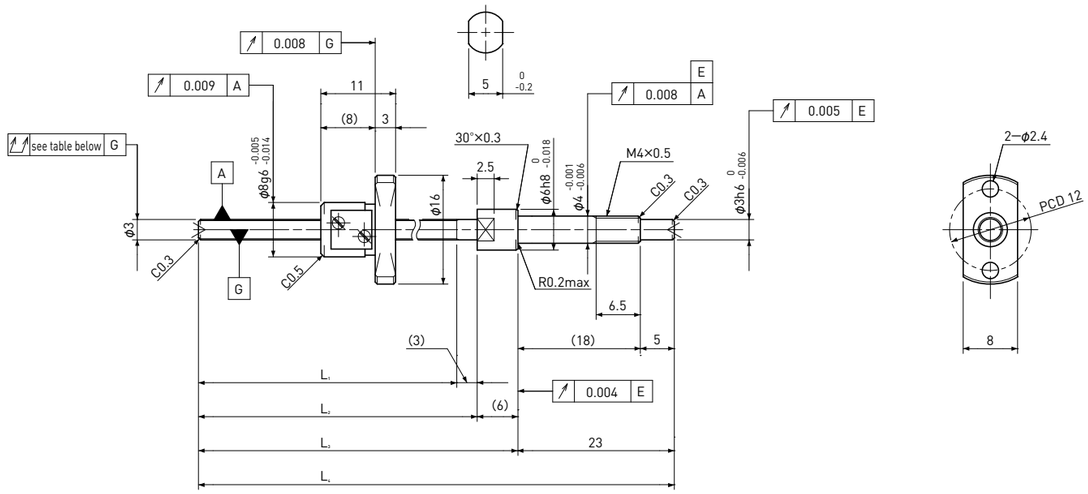

Unit:mm

Ball Screw Specifications	
Ball size	φ0.4
Number of thread	1
Thread direction	Right
Shaft root dia.	φ2.6
Number of circuit	2.7×1
Shaft, Nut material	SCM415H
Surface hardness	HRC58～62 (Thread area)
Anti-rust treatment	Anti-rust oil

Supported-side end-journal profile

A-type

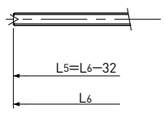

L_5:Thread length after end-journal machining.
L_6:Total length after end-journal machining.

Support-unit Recommendation		
	Supported-side :	—
	Fixed-side :	MSU-4C/4G

D-type : Other than the above.

Unit:mm

Ball Screw Model	Travel	Grade	Shaft length				Lead accuracy		Total Run-out	Axial play	Preload Torque Nm	Basic Load Rating N	
			L_1	L_2	L_3	L_4	Travel deviation e_p	Variation V_u				Dynamic Ca	Static Coa
SG0300.5-038R070C3	25	C3	38	41	47	70	±0.008	0.008	0.025	～0.005	—	150	220

Note) Please refer to page A206 for order code of end-journal machining.

Standard products in stock SG series

SG0301 | Shaft dia. φ3 Lead 1mm | C3

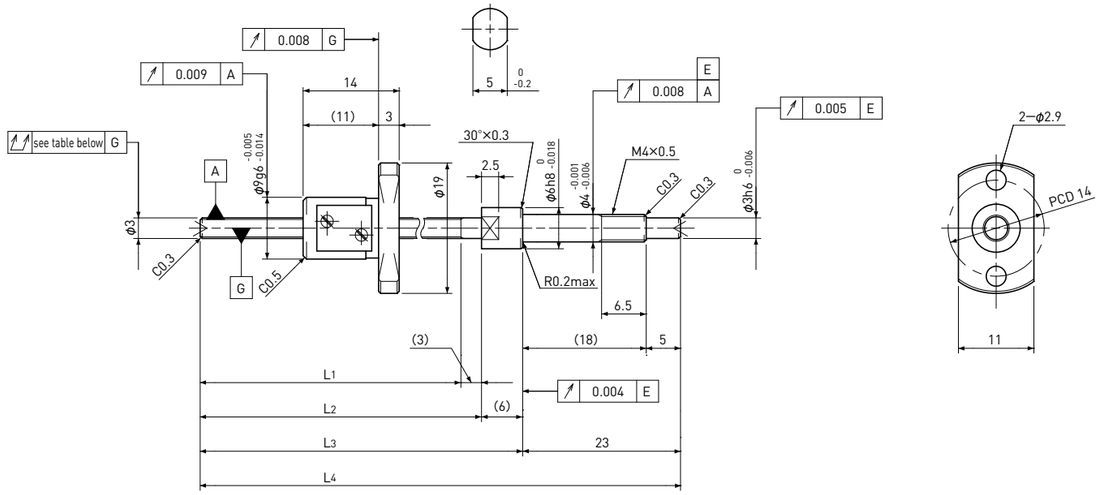

Unit:mm

Ball Screw Specifications	
Ball size	φ0.6
Number of thread	1
Thread direction	Right
Shaft root dia.	φ2.4
Number of circuit	3.7×1
Shaft, Nut material	SCM415H
Surface hardness	HRC58～62 (Thread area)
Anti-rust treatment	Anti-rust oil

Supported-side end-journal profile

A-type

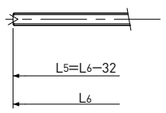

L_5:Thread length after end-journal machining.
L_6:Total length after end-journal machining.

Support-unit Recommendation		
	Supported-side :	—
	Fixed-side :	MSU-4C/4G

D-type : Other than the above.

Unit:mm

Ball Screw Model	Travel	Grade	Shaft length				Lead accuracy		Total Run-out	Axial play	Preload Torque Nm	Basic Load Rating N	
			L_1	L_2	L_3	L_4	Travel deviation e_p	Variation V_u				Dynamic Ca	Static Coa
SG0301-038R070C3	20	C3	38	41	47	70	±0.008	0.008	0.025	～0.005	—	330	440

Note) Please refer to page A206 for order code of end-journal machining.

Standard products in stock SG series

SG0401 | Shaft dia. $\phi 4$ Lead 1mm | C3&C5

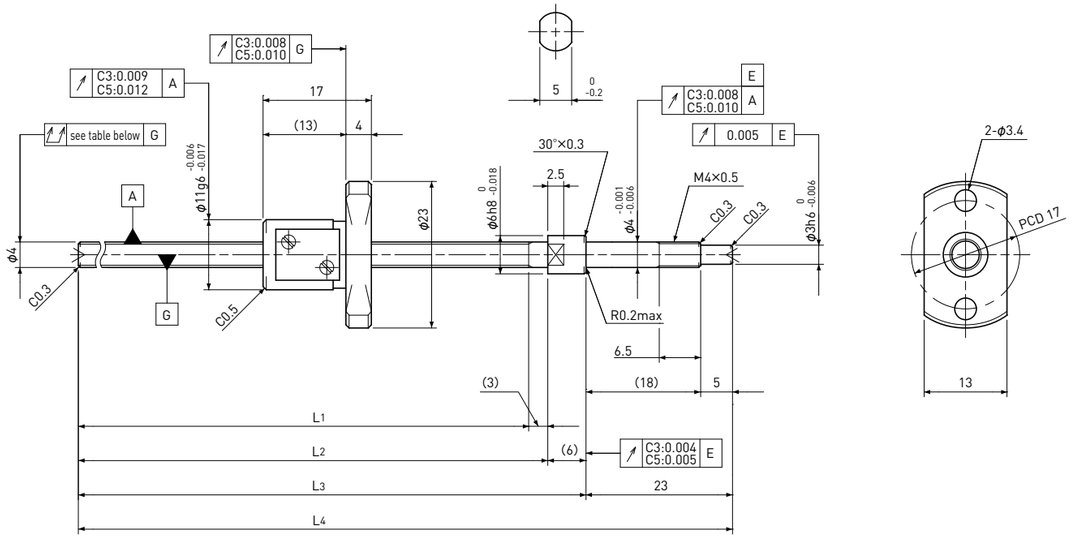

Unit:mm

Ball Screw Specifications	
Ball size	ϕ0.8
Number of thread	1
Thread direction	Right
Shaft root dia.	ϕ3.3
Number of circuit	3.7×1
Shaft, Nut material	SCM415H
Surface hardness	HRC58～62 (Thread area)
Anti-rust treatment	Anti-rust oil

Supported-side end-journal profile

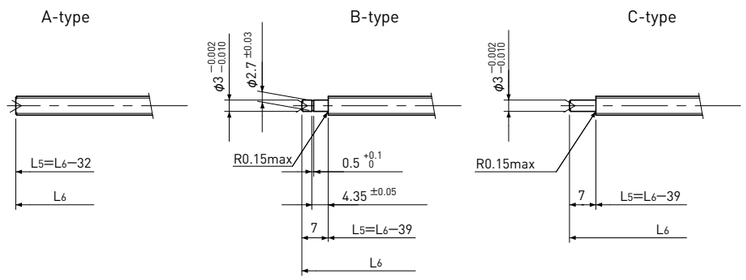

L_5:Thread length after end-journal machining.
L_6:Total length after end-journal machining.

Support-unit Recommendation			
	Supported-side	:	MSU-4CS/4GS
	Fixed-side	:	MSU-4C/4G

D-type : Other than the above.

Unit:mm

Ball Screw Model	Travel	Grade	Shaft length				Lead accuracy		Total Run-out	Axial play	Preload Torque Nm	Basic Load Rating N	
			L_1	L_2	L_3	L_4	Travel deviation e_p	Variation V_u				Dynamic Ca	Static Coa
SG0401-063R095C3	45	C3	63	66	72	95	±0.008	0.008	0.025	0 Spacer Ball (1:1)	～0.004	350	400
SG0401-083R115C3	65	C3	83	86	92	115	±0.008	0.008	0.025				
SG0401-103R135C3	85	C3	103	106	112	135	±0.010	0.008	0.035				
SG0401-063R095C5	45	C5	63	66	72	95	±0.018	0.018	0.035	～0.005	—	560	790
SG0401-083R115C5	65	C5	83	86	92	115	±0.018	0.018	0.035				
SG0401-103R135C5	85	C5	103	106	112	135	±0.020	0.018	0.050				

Note)Please refer to page A206 for order code of end-journal machining.

Standard products in stock SG series

SG0402 | Shaft dia. $\phi 4$ Lead 2mm | C3

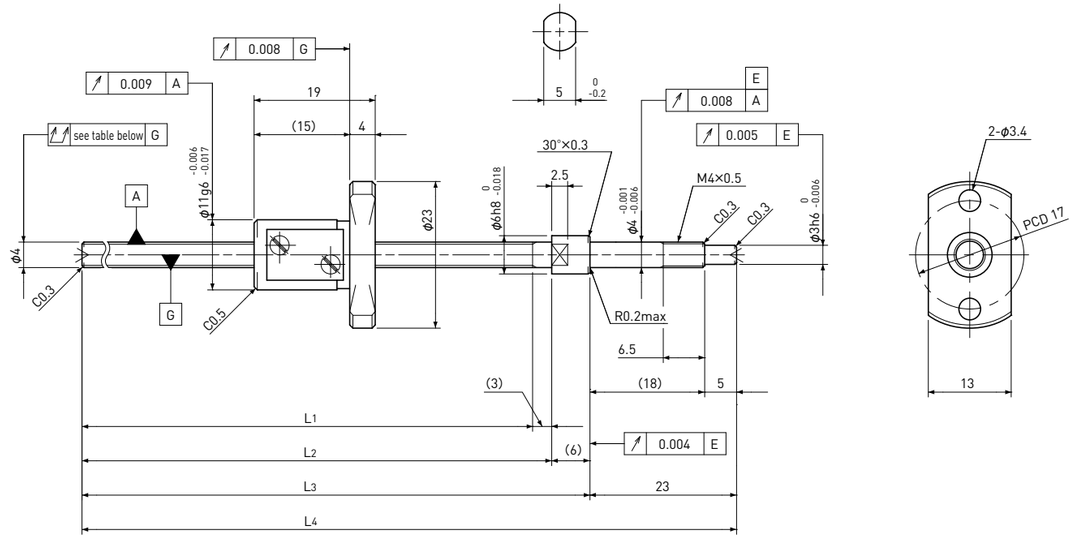

Unit:mm

Ball Screw Specifications	
Ball size	ϕ0.8
Number of thread	1
Thread direction	Right
Shaft root dia.	ϕ3.3
Number of circuit	2.7×1
Shaft, Nut material	SCM415H
Surface hardness	HRC58～62 (Thread area)
Anti-rust treatment	Anti-rust oil

Supported-side end-journal profile

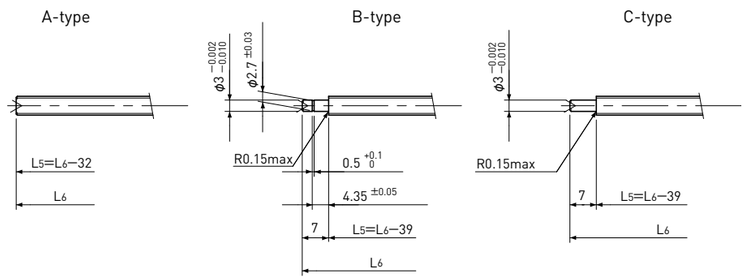

L_5:Thread length after end-journal machining.
L_6:Total length after end-journal machining.

Support-unit Recommendation			
	Supported-side	:	MSU-4CS/4GS
	Fixed-side	:	MSU-4C/4G

D-type : Other than the above.

Unit:mm

Ball Screw Model	Travel	Grade	Shaft length				Lead accuracy		Total Run-out	Axial play	Preload Torque Nm	Basic Load Rating N	
			L_1	L_2	L_3	L_4	Travel deviation e_p	Variation V_u				Dynamic Ca	Static Coa
SG0402-103R135C3	80	C3	103	106	112	135	±0.010	0.008	0.035	～0.005	—	420	570

Note)Please refer to page A206 for order code of end-journal machining.

Standard products in stock SG series

SG0504 | Shaft dia. ϕ5 Lead 4mm | C3&C5

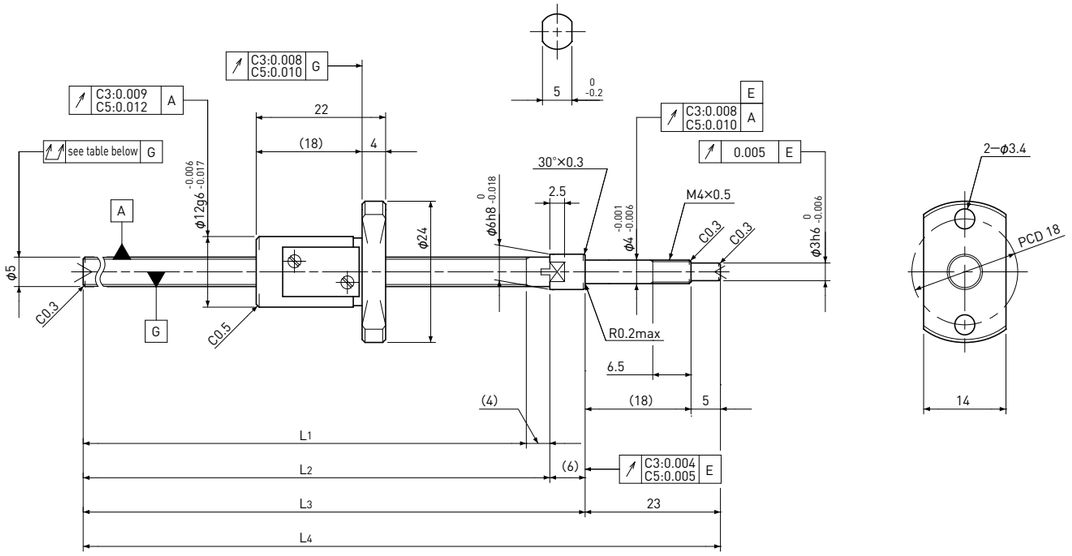

Unit:mm

Ball Screw Specifications	
Ball size	ϕ0.8
Number of thread	1
Thread direction	Right
Shaft root dia.	ϕ4.3
Number of circuit	2.7×1
Shaft, Nut material	SCM415H
Surface hardness	HRC58～62 (Thread area)
Anti-rust treatment	Anti-rust oil

Supported-side end-journal profile

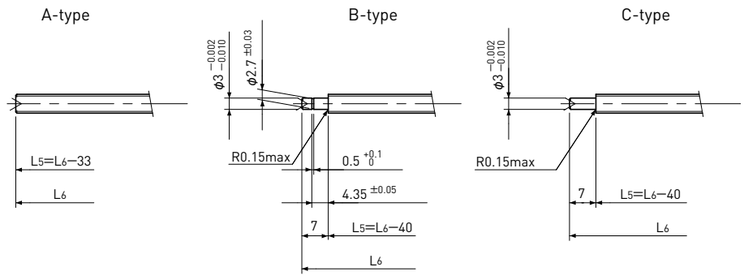

L_5:Thread length after end-journal machining.
L_6:Total length after end-journal machining.

Support-unit Recommendation		
Supported-side	:	MSU-4CS/4GS
Fixed-side	:	MSU-4C/4G

D-type : Other than the above.

Unit:mm

Ball Screw Model	Travel	Grade	Shaft length L_1	L_2	L_3	L_4	Lead accuracy Travel deviation e_p	Variation V_u	Total Run-out	Axial play	Preload Torque Nm	Basic Load Rating N Dynamic Ca	Static Coa
SG0504-062R095C3	40	C3	62	66	72	95	±0.008	0.008	0.025	0 Spacer Ball (1:1)	～0.005	300	360
SG0504-112R145C3	90	C3	112	116	122	145	±0.010	0.008	0.035				
SG0504-062R095C5	40	C5	62	66	72	95	±0.018	0.018	0.035	～0.005	—	470	720
SG0504-112R145C5	90	C5	112	116	122	145	±0.020	0.018	0.050				

Note)Please refer to page A206 for order code of end-journal machining.

Standard products in stock SG series

SG0601 | Shaft dia. ϕ6 Lead 1mm | C3&C5

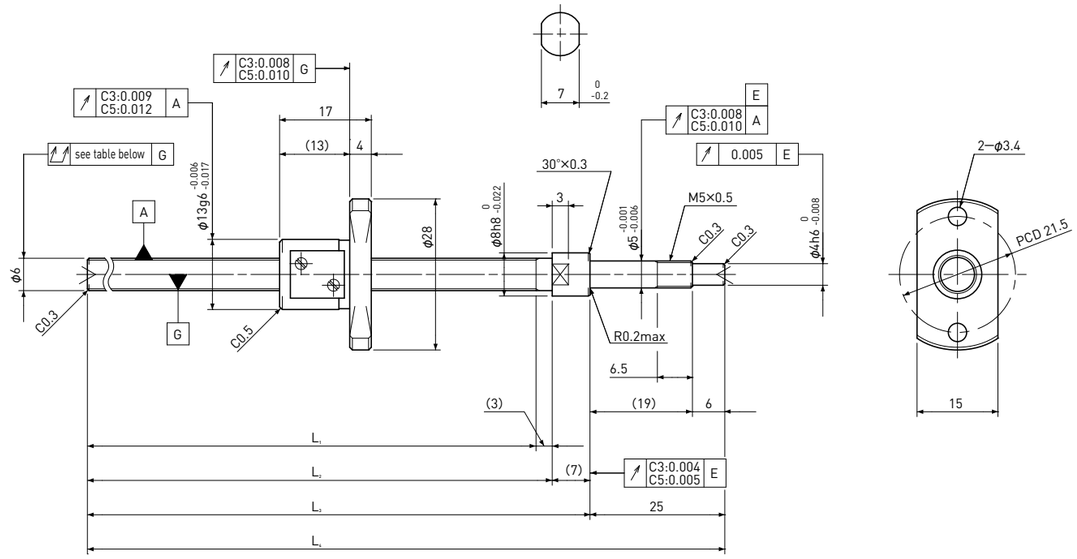

Unit:mm

Ball Screw Specifications	
Ball size	ϕ0.8
Number of thread	1
Thread direction	Right
Shaft root dia.	ϕ5.3
Number of circuit	3.7×1
Shaft, Nut material	SCM415H
Surface hardness	HRC58～62 (Thread area)
Anti-rust treatment	Anti-rust oil

Supported-side end-journal profile

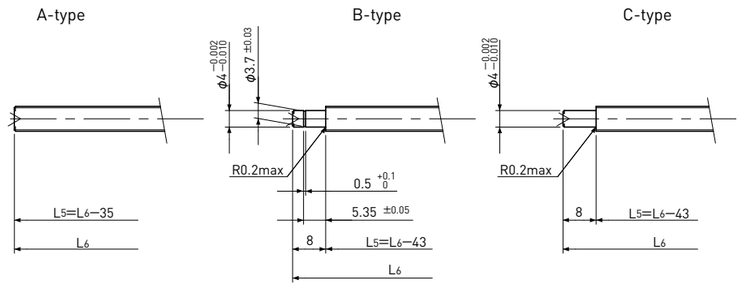

L_5:Thread length after end-journal machining.
L_6:Total length after end-journal machining.

Support-unit Recommendation		
Supported-side	:	MSU-5CS/5GS
Fixed-side	:	MSU-5C/5G

D-type : Other than the above.

Unit:mm

Ball Screw Model	Travel	Grade	Shaft length L_1	L_2	L_3	L_4	Lead accuracy Travel deviation e_p	Variation V_u	Total Run-out	Axial play	Preload Torque Nm	Basic Load Rating N Dynamic Ca	Static Coa
SG0601-085R120C3	65	C3	85	88	95	120	±0.008	0.008	0.025	0 Spacer Ball (1:1)	～0.006	430	610
SG0601-110R145C3	90	C3	110	113	120	145	±0.010	0.008	0.035				
SG0601-135R170C3	115	C3	135	138	145	170	±0.010	0.008	0.035				
SG0601-085R120C5	65	C5	85	88	95	120	±0.018	0.018	0.035	～0.005	—	680	1200
SG0601-110R145C5	90	C5	110	113	120	145	±0.020	0.018	0.050				
SG0601-135R170C5	115	C5	135	138	145	170	±0.020	0.018	0.050				

Note)Please refer to page A206 for order code of end-journal machining.

Standard products in stock SG series

SG0602 | Shaft dia. ϕ6 Lead 2mm | C3&C5

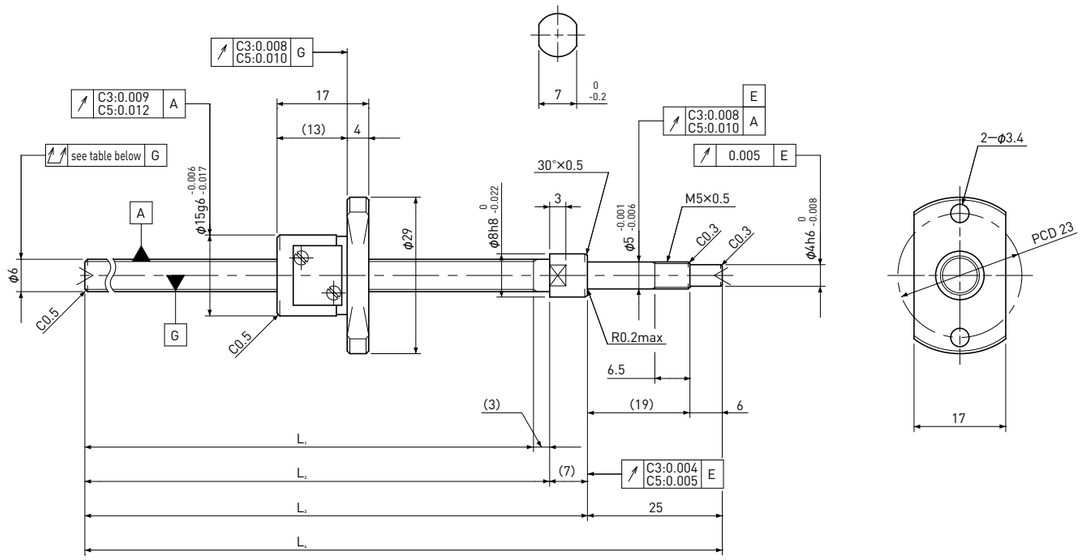

Unit:mm

Ball Screw Specifications	
Ball size	ϕ1.0
Number of thread	1
Thread direction	Right
Shaft root dia.	ϕ5.1
Number of circuit	2.7×1
Shaft, Nut material	SCM415H
Surface hardness	HRC58～62 (Thread area)
Anti-rust treatment	Anti-rust oil

Supported-side end-journal profile

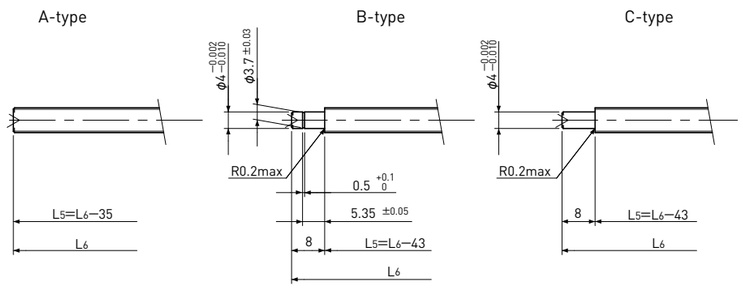

L_5:Thread length after end-journal machining.
L_6:Total length after end-journal machining.

Support-unit Recommendation		
Supported-side	:	MSU-5CS/5GS
Fixed-side	:	MSU-5C/5G

D-type : Other than the above.

Unit:mm

Ball Screw Model	Travel	Grade	Shaft length				Lead accuracy		Total Run-out	Axial play	Preload Torque Nm	Basic Load Rating N	
			L_1	L_2	L_3	L_4	Travel deviation e_p	Variation V_u				Dynamic Ca	Static Coa
SG0602-085R120C3	65	C3	85	88	95	120	±0.008	0.008	0.025	0 Spacer Ball (1:1)	0.003～0.007	470	590
SG0602-135R170C3	115	C3	135	138	145	170	±0.010	0.008	0.035				
SG0602-085R120C5	65	C5	85	88	95	120	±0.018	0.018	0.035	～0.005	—	750	1200
SG0602-135R170C5	115	C5	135	138	145	170	±0.020	0.018	0.050				

Note) Please refer to page A206 for order code of end-journal machining.

Standard products in stock SG series

SG0602.5 | Shaft dia. ϕ6 Lead 2.5mm | C3&C5

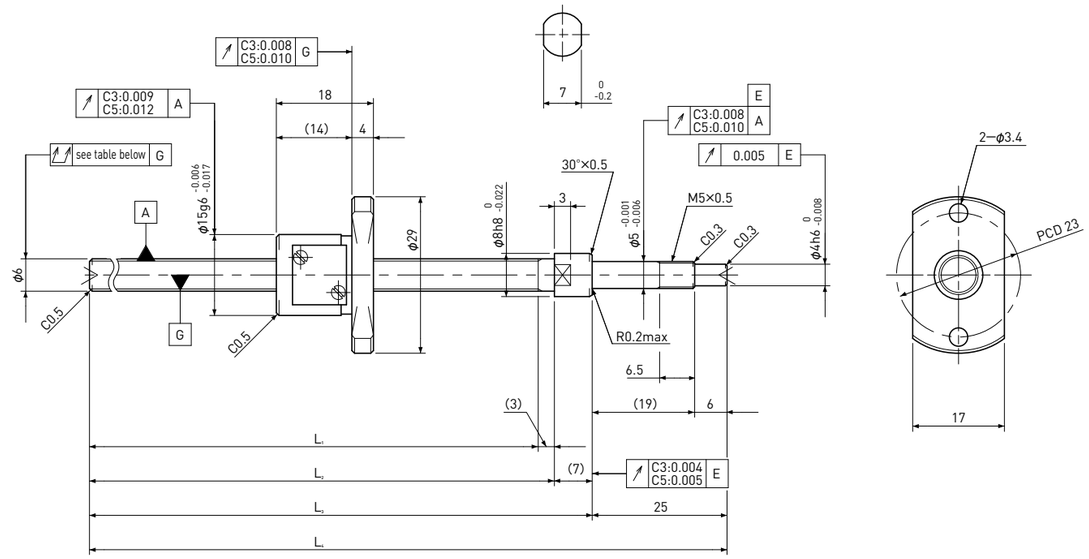

Unit:mm

Ball Screw Specifications	
Ball size	ϕ1.0
Number of thread	1
Thread direction	Right
Shaft root dia.	ϕ5.1
Number of circuit	2.7×1
Shaft, Nut material	SCM415H
Surface hardness	HRC58～62 (Thread area)
Anti-rust treatment	Anti-rust oil

Supported-side end-journal profile

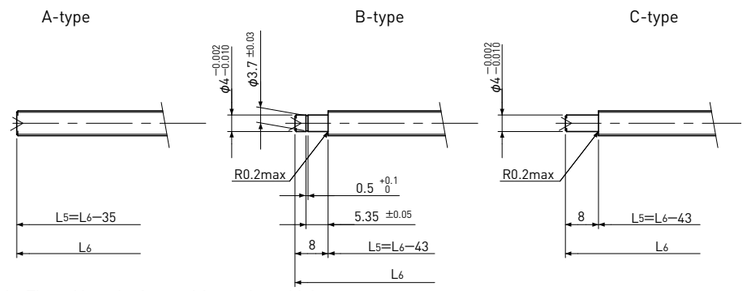

L_5:Thread length after end-journal machining.
L_6:Total length after end-journal machining.

Support-unit Recommendation		
Supported-side	:	MSU-5CS/5GS
Fixed-side	:	MSU-5C/5G

D-type : Other than the above.

Unit:mm

Ball Screw Model	Travel	Grade	Shaft length				Lead accuracy		Total Run-out	Axial play	Preload Torque Nm	Basic Load Rating N	
			L_1	L_2	L_3	L_4	Travel deviation e_p	Variation V_u				Dynamic Ca	Static Coa
SG0602.5-085R120C3	65	C3	85	88	95	120	±0.008	0.008	0.025	0 Spacer Ball (1:1)	0.003～0.007	470	590
SG0602.5-135R170C3	115	C3	135	138	145	170	±0.010	0.008	0.035				
SG0602.5-085R120C5	65	C5	85	88	95	120	±0.018	0.018	0.035	～0.005	—	750	1200
SG0602.5-135R170C5	115	C5	135	138	145	170	±0.020	0.018	0.050				

Note) Please refer to page A206 for order code of end-journal machining.

Standard products in stock SG series

SG0606 | Shaft dia. $\phi 6$ Lead 6mm | C5

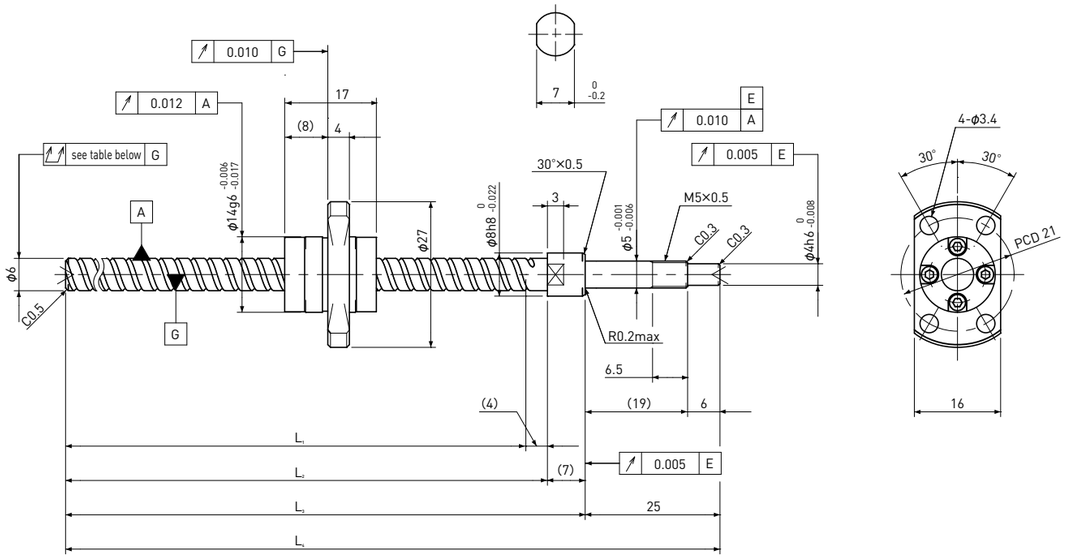

Unit:mm

Ball Screw Specifications

Ball size	ϕ1.0
Number of thread	2
Thread direction	Right
Shaft root dia.	ϕ5.2
Number of circuit	1.6×2
Shaft, Nut material	SCM415H
Surface hardness	HRC58～62 (Thread area)
Anti-rust treatment	Anti-rust oil

Supported-side end-journal profile

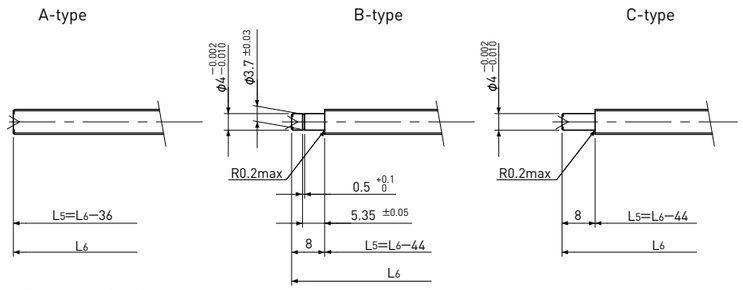

L_5:Thread length after end-journal machining.
L_6:Total length after end-journal machining.

Support-unit Recommendation			
	Supported-side	:	MSU-5CS/5GS
	Fixed-side	:	MSU-5C/5G

D-type : Other than the above.

Unit:mm

Ball Screw Model	Travel	Grade	Shaft length				Lead accuracy		Total Run-out	Axial play	Preload Torque Nm	Basic Load Rating N	
			L_1	L_2	L_3	L_4	Travel deviation e_p	Variation V_u				Dynamic Ca	Static Coa
SG0606-084R120C5	65	C5	84	88	95	120	±0.018	0.018	0.035	～0.005	—	870	1450
SG0606-134R170C5	115	C5	134	138	145	170	±0.020	0.018	0.050				

Note) Please refer to page A206 for order code of end-journal machining.

Standard products in stock SG series

SG0610 | Shaft dia. $\phi 6$ Lead 10mm | C5

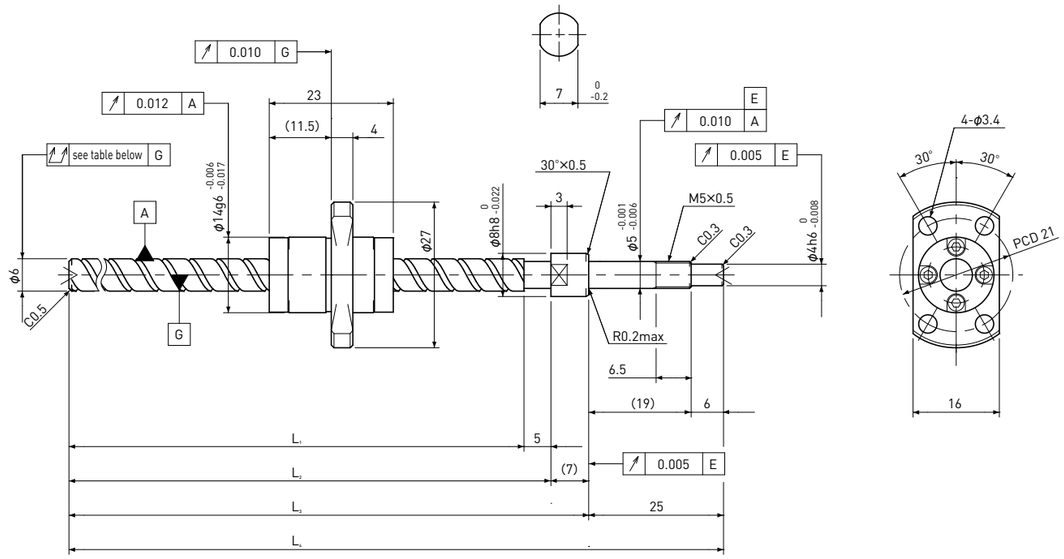

Unit:mm

Ball Screw Specifications

Ball size	ϕ1.2
Number of thread	2
Thread direction	Right
Shaft root dia.	ϕ5.0
Number of circuit	1.2×2
Shaft, Nut material	SCM415H
Surface hardness	HRC58～62 (Thread area)
Anti-rust treatment	Anti-rust oil

Supported-side end-journal profile

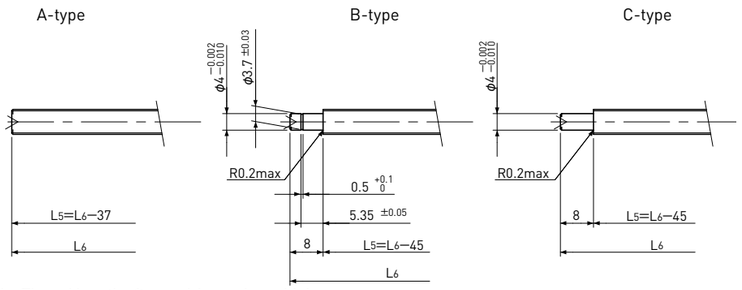

L_5:Thread length after end-journal machining.
L_6:Total length after end-journal machining.

Support-unit Recommendation			
	Supported-side	:	MSU-5CS/5GS
	Fixed-side	:	MSU-5C/5G

D-type : Other than the above.

Unit:mm

Ball Screw Model	Travel	Grade	Shaft length				Lead accuracy		Total Run-out	Axial play	Preload Torque Nm	Basic Load Rating N	
			L_1	L_2	L_3	L_4	Travel deviation e_p	Variation V_u				Dynamic Ca	Static Coa
SG0610-133R170C5	110	C5	133	138	145	170	±0.020	0.018	0.050	～0.005	—	950	1600

Note) Please refer to page A206 for order code of end-journal machining.

Standard products in stock SG series

SG0801 | Shaft dia. ϕ8 Lead 1mm | C3&C5

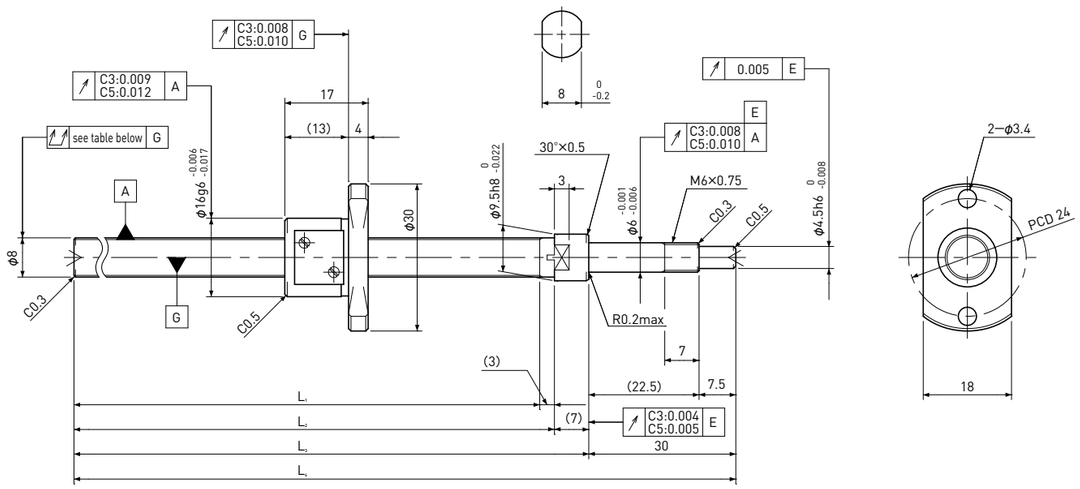

Unit:mm

Ball Screw Specifications

Ball size	ϕ0.8
Number of thread	1
Thread direction	Right
Shaft root dia.	ϕ7.3
Number of circuit	3.7×1
Shaft, Nut material	SCM415H
Surface hardness	HRC58～62 (Thread area)
Anti-rust treatment	Anti-rust oil

Supported-side end-journal profile

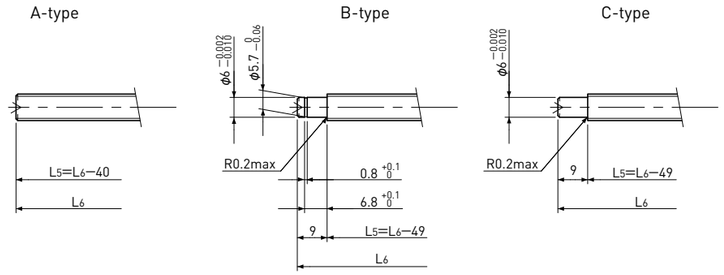

L5:Thread length after end-journal machining.
L6:Total length after end-journal machining.

Support-unit Recommendation			
	Supported-side	:	MSU-6CS/6GS
	Fixed-side	:	MSU-6C/6G

D-type : Other than the above.

Unit:mm

Ball Screw Model	Travel	Grade	Shaft length L1	L2	L3	L4	Lead accuracy Travel deviation ep	Variation Vu	Total Run-out	Axial play	Preload Torque Nm	Basic Load Rating N Dynamic Ca	Static Coa
SG0801-100R140C3	80	C3	100	103	110	140	±0.008	0.008	0.035	0 Spacer Ball (1:1)	0.002～0.008	490	820
SG0801-130R170C3	110	C3	130	133	140	170	±0.010	0.008	0.035				
SG0801-160R200C3	140	C3	160	163	170	200	±0.010	0.008	0.035				
SG0801-210R250C3	190	C3	210	213	220	250	±0.012	0.008	0.050				
SG0801-100R140C5	80	C5	100	103	110	140	±0.018	0.018	0.050	～0.005	—	780	1650
SG0801-130R170C5	110	C5	130	133	140	170	±0.020	0.018	0.050				
SG0801-160R200C5	140	C5	160	163	170	200	±0.020	0.018	0.050				
SG0801-210R250C5	190	C5	210	213	220	250	±0.023	0.018	0.065				

Note)Please refer to page A206 for order code of end-journal machining.

Standard products in stock SG series

SG0802 | Shaft dia. ϕ8 Lead 2mm | C3&C5

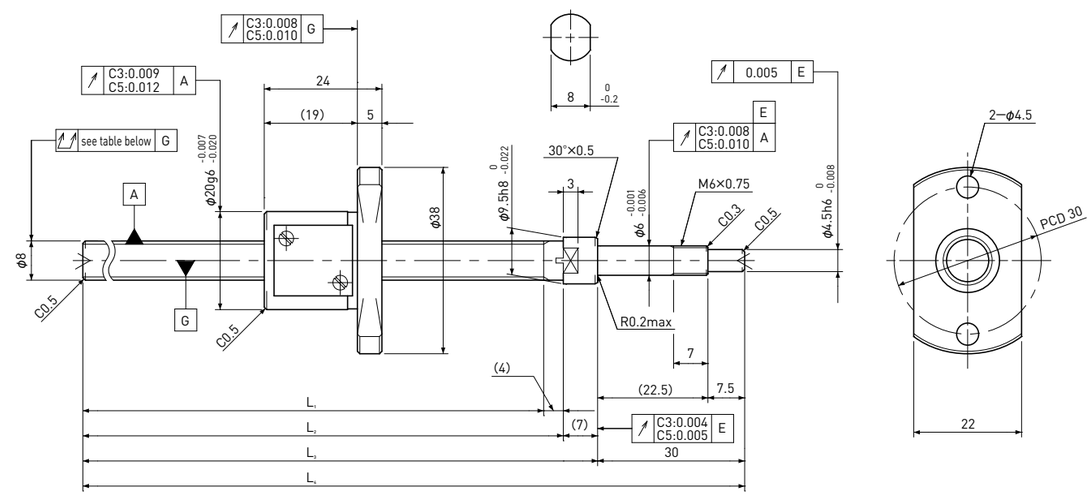

Unit:mm

Ball Screw Specifications

Ball size	ϕ1.5875
Number of thread	1
Thread direction	Right
Shaft root dia.	ϕ6.6
Number of circuit	3.7×1
Shaft, Nut material	SCM415H
Surface hardness	HRC58～62 (Thread area)
Anti-rust treatment	Anti-rust oil

Supported-side end-journal profile

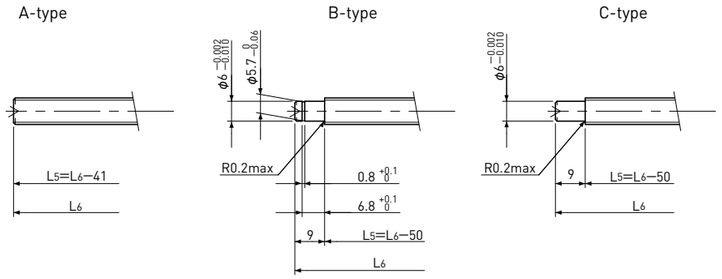

L5:Thread length after end-journal machining.
L6:Total length after end-journal machining.

Support-unit Recommendation			
	Supported-side	:	MSU-6CS/6GS
	Fixed-side	:	MSU-6C/6G

D-type : Other than the above.

Unit:mm

Ball Screw Model	Travel	Grade	Shaft length L1	L2	L3	L4	Lead accuracy Travel deviation ep	Variation Vu	Total Run-out	Axial play	Preload Torque Nm	Basic Load Rating N Dynamic Ca	Static Coa
SG0802-099R140C3	75	C3	99	103	110	140	±0.008	0.008	0.035	0 Spacer Ball (1:1)	0.004～0.020	1550	2100
SG0802-129R170C3	105	C3	129	133	140	170	±0.010	0.008	0.035				
SG0802-159R200C3	135	C3	159	163	170	200	±0.010	0.008	0.035				
SG0802-209R250C3	185	C3	209	213	220	250	±0.012	0.008	0.050				
SG0802-099R140C5	75	C5	99	103	110	140	±0.018	0.018	0.050	～0.005	—	2400	4100
SG0802-129R170C5	105	C5	129	133	140	170	±0.020	0.018	0.050				
SG0802-159R200C5	135	C5	159	163	170	200	±0.020	0.018	0.050				
SG0802-209R250C5	185	C5	209	213	220	250	±0.023	0.018	0.065				

Note)Please refer to page A206 for order code of end-journal machining.

Standard products in stock SG series

SG0802.5 | Shaft dia. ϕ8 Lead 2.5mm | C5

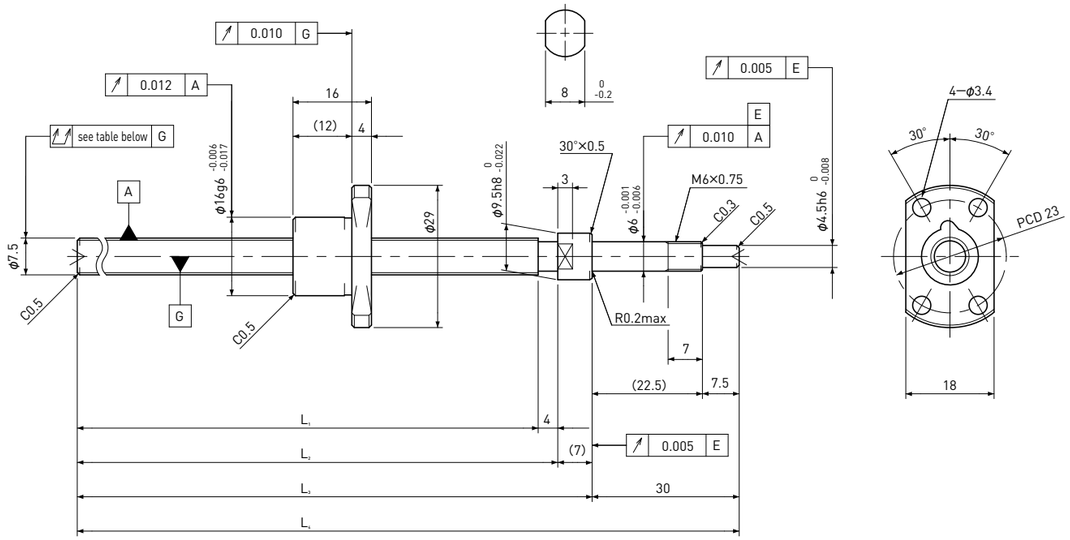

Unit : mm

Ball Screw Specifications	
Ball size	ϕ1.5875
Number of thread	1
Thread direction	Right
Shaft root dia.	ϕ6.3
Number of circuit	2.7×1
Shaft, Nut material	SCM415H
Surface hardness	HRC58～62 (Thread area)
Anti-rust treatment	Anti-rust oil

Supported-side end-journal profile

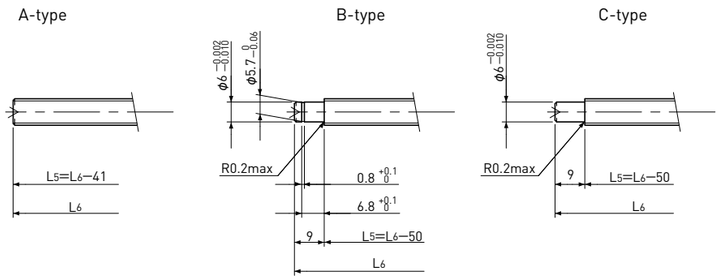

L5 : Thread length after end-journal machining.
L6 : Total length after end-journal machining.

Support-unit Recommendation		
	Supported-side :	MSU-6CS/6GS
	Fixed-side :	MSU-6C/6G

D-type : Other than the above.

Unit : mm

Ball Screw Model	Travel	Grade	Shaft length L1	L2	L3	L4	Lead accuracy Travel deviation ep	Variation Vu	Total Run-out	Axial play	Preload Torque Nm	Basic Load Rating N Dynamic Ca	Static Coa
SG0802.5-129R170C5	110	C5	129	133	140	170	±0.020	0.018	0.050	～0.005	—	1850	3000
SG0802.5-209R250C5	190	C5	209	213	220	250	±0.023	0.018	0.065				

Note) Please refer to page A206 for order code of end-journal machining.

Standard products in stock SG series

SG0804 | Shaft dia. ϕ8 Lead 4mm | C3&C5

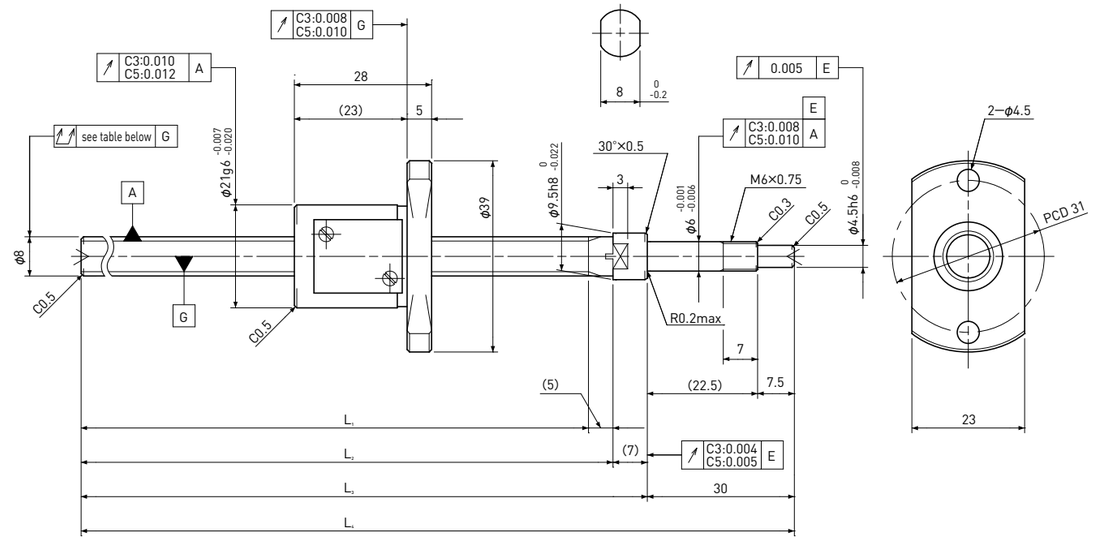

Unit : mm

Ball Screw Specifications	
Ball size	ϕ2.0
Number of thread	1
Thread direction	Right
Shaft root dia.	ϕ6.2
Number of circuit	2.7×1
Shaft, Nut material	SCM415H
Surface hardness	HRC58～62 (Thread area)
Anti-rust treatment	Anti-rust oil

Supported-side end-journal profile

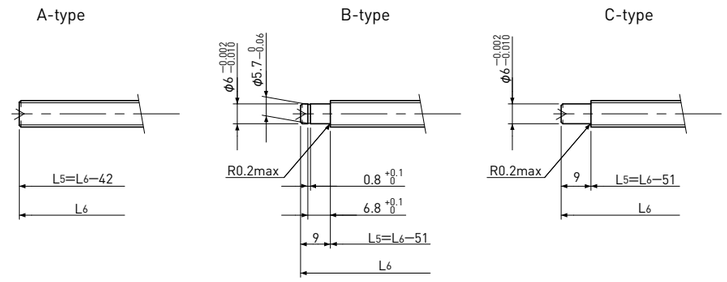

L5 : Thread length after end-journal machining.
L6 : Total length after end-journal machining.

Support-unit Recommendation		
	Supported-side :	MSU-6CS/6GS
	Fixed-side :	MSU-6C/6G

D-type : Other than the above.

Unit : mm

Ball Screw Model	Travel	Grade	Shaft length L1	L2	L3	L4	Lead accuracy Travel deviation ep	Variation Vu	Total Run-out	Axial play	Preload Torque Nm	Basic Load Rating N Dynamic Ca	Static Coa
SG0804-098R140C3	70	C3	98	103	110	140	±0.008	0.008	0.035	0 Spacer Ball (1:1)	～0.015	1650	2100
SG0804-208R250C3	180	C3	208	213	220	250	±0.012	0.008	0.050				
SG0804-098R140C5	70	C5	98	103	110	140	±0.018	0.018	0.050	～0.005	—	2600	4200
SG0804-208R250C5	180	C5	208	213	220	250	±0.023	0.018	0.065				

Note) Please refer to page A206 for order code of end-journal machining.

Standard products in stock SG series

SG0805 | Shaft dia. φ8 Lead 5mm | C3&C5

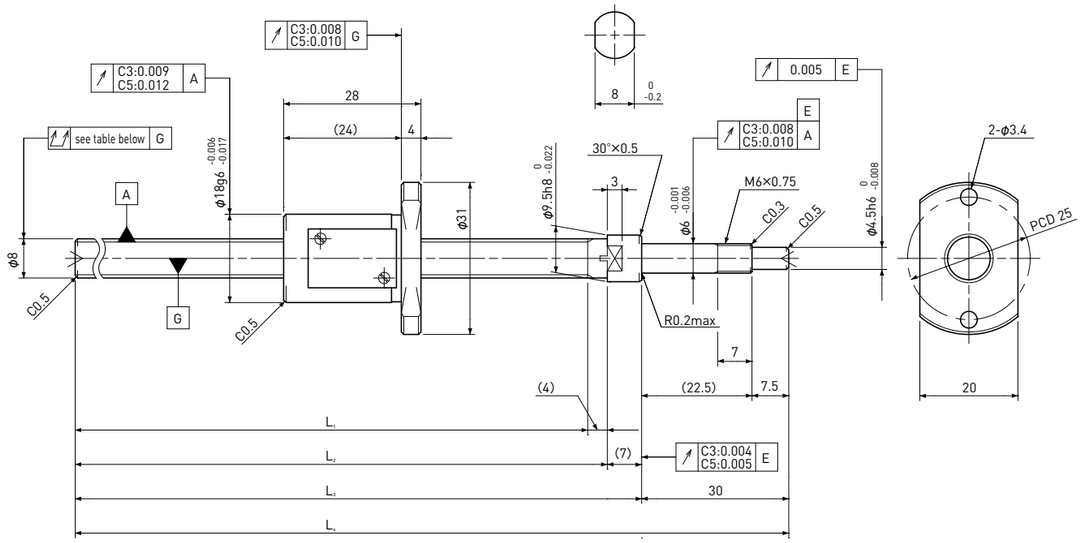

Unit:mm

Ball Screw Specifications	
Ball size	φ1.5875
Number of thread	1
Thread direction	Right
Shaft root dia.	φ6.6
Number of circuit	2.7×1
Shaft, Nut material	SCM415H
Surface hardness	HRC58～62 (Thread area)
Anti-rust treatment	Anti-rust oil

Supported-side end-journal profile

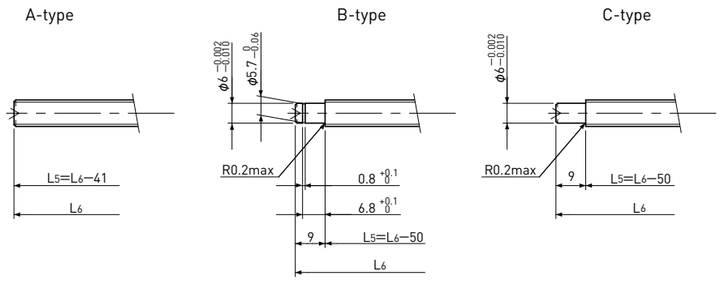

L5:Thread length after end-journal machining.
L6:Total length after end-journal machining.

Support-unit Recommendation		
	Supported-side :	MSU-6CS/6GS
	Fixed-side :	MSU-6C/6G

D-type : Other than the above.

Unit:mm

Ball Screw Model	Travel	Grade	Shaft length L1	L2	L3	L4	Lead accuracy Travel deviation ep	Variation Vu	Total Run-out	Axial play	Preload Torque Nm	Basic Load Rating N Dynamic Ca	Static Coa
SG0805-099R140C3	70	C3	99	103	110	140	±0.008	0.008	0.035	0 Spacer Ball (1:1)	～0.015	1150	1500
SG0805-209R250C3	180	C3	209	213	220	250	±0.012	0.008	0.050				
SG0805-099R140C5	70	C5	99	103	110	140	±0.018	0.018	0.050	～0.005	—	1850	3000
SG0805-209R250C5	180	C5	209	213	220	250	±0.023	0.018	0.065				

Note)Please refer to page A206 for order code of end-journal machining.

Standard products in stock SG series

SG0808 | Shaft dia. φ8 Lead 8mm | C5

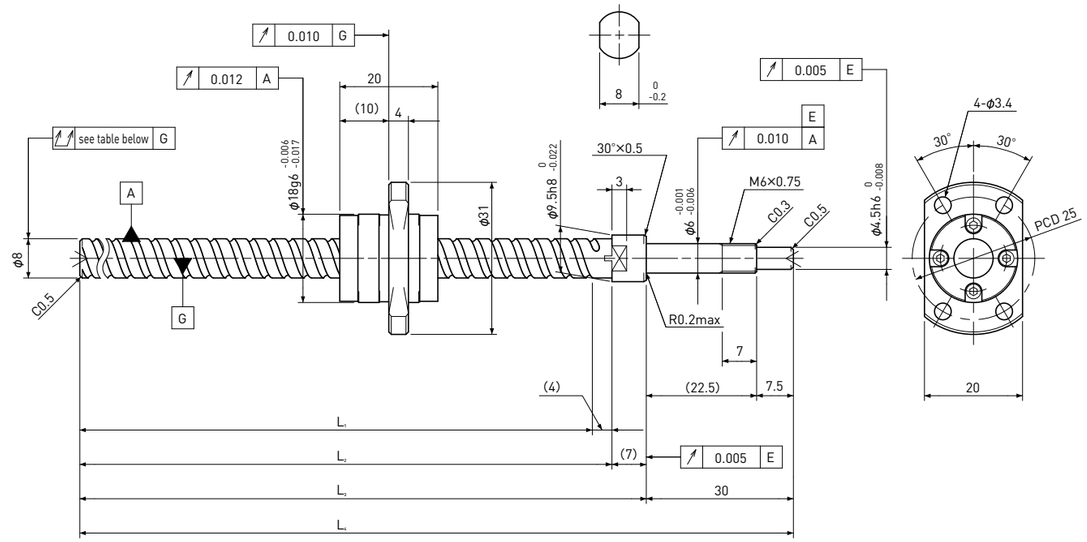

Unit:mm

Ball Screw Specifications	
Ball size	φ1.5875
Number of thread	2
Thread direction	Right
Shaft root dia.	φ6.7
Number of circuit	1.6×2
Shaft, Nut material	SCM415H
Surface hardness	HRC58～62 (Thread area)
Anti-rust treatment	Anti-rust oil

Supported-side end-journal profile

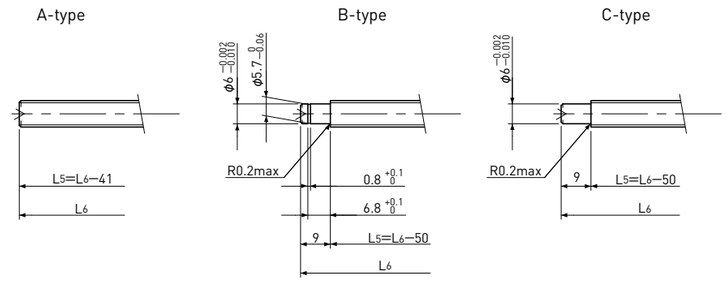

L5:Thread length after end-journal machining.
L6:Total length after end-journal machining.

Support-unit Recommendation		
	Supported-side :	MSU-6CS/6GS
	Fixed-side :	MSU-6C/6G

D-type : Other than the above.

Unit:mm

Ball Screw Model	Travel	Grade	Shaft length L1	L2	L3	L4	Lead accuracy Travel deviation ep	Variation Vu	Total Run-out	Axial play	Preload Torque Nm	Basic Load Rating N Dynamic Ca	Static Coa
SG0808-099R140C5	75	C5	99	103	110	140	±0.018	0.018	0.050	～0.005	—	2200	3800
SG0808-209R250C5	185	C5	209	213	220	250	±0.023	0.018	0.065				

Note)Please refer to page A206 for order code of end-journal machining.

Standard products in stock SG series

SG0810 | Shaft dia. ϕ8 Lead 10mm | C5

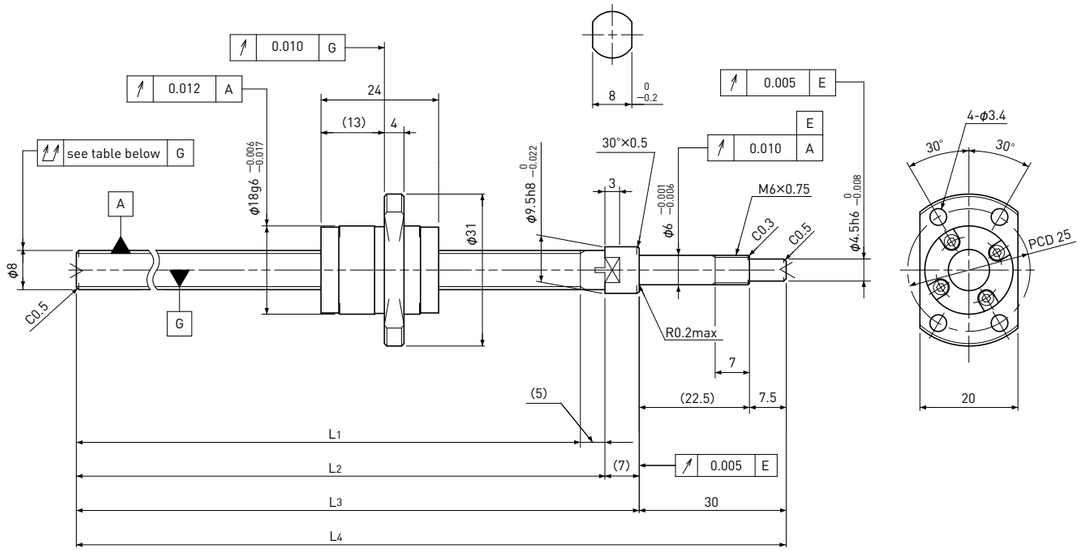

Unit:mm

Ball Screw Specifications	
Ball size	ϕ1.5875
Number of thread	2
Thread direction	Right
Shaft root dia.	ϕ6.7
Number of circuit	1.65×2
Shaft, Nut material	SCM415H
Surface hardness	HRC58～62 (Thread area)
Anti-rust treatment	Anti-rust oil

Supported-side end-journal profile

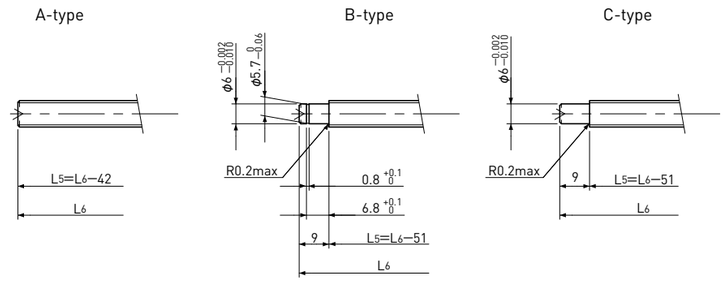

L5:Thread length after end-journal machining.
L6:Total length after end-journal machining.

Support-unit Recommendation			
	Supported-side	:	MSU-6CS/6GS
	Fixed-side	:	MSU-6C/6G

D-type : Other than the above.

Unit:mm

Ball Screw Model	Travel	Grade	Shaft length L1	L2	L3	L4	Lead accuracy Travel deviation ep	Variation Vu	Total Run-out	Axial play	Preload Torque Nm	Basic Load Rating N Dynamic Ca	Static Coa
SG0810-098R140C5	70	C5	98	103	110	140	±0.018	0.018	0.050	～0.005	—	2200	3900
SG0810-208R250C5	180	C5	208	213	220	250	±0.023	0.018	0.065				

Note) Please refer to page A206 for order code of end-journal machining.

Standard products in stock SG series

SG0812 | Shaft dia. ϕ8 Lead 12mm | C5

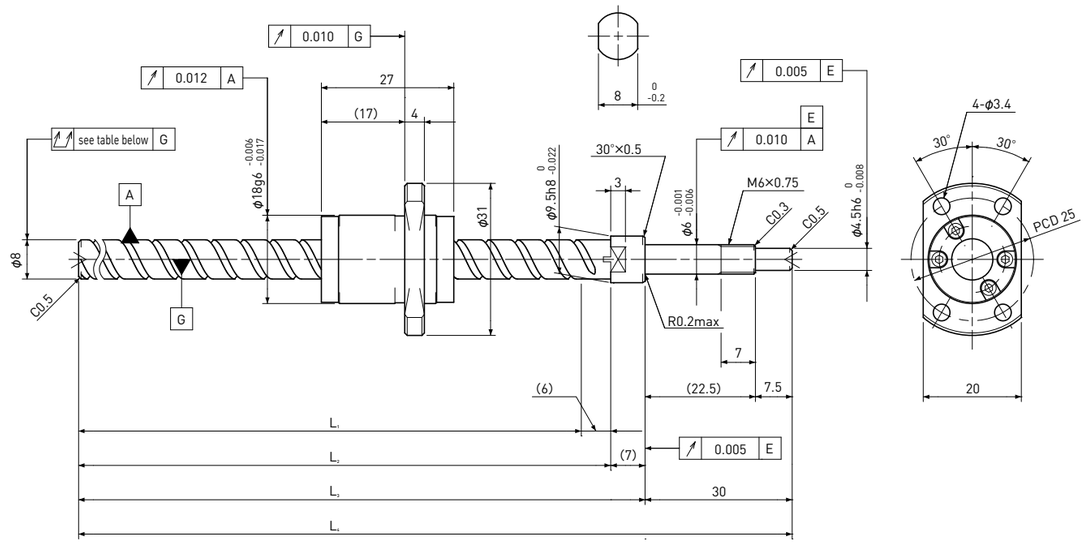

Unit:mm

Ball Screw Specifications	
Ball size	ϕ1.5875
Number of thread	2
Thread direction	Right
Shaft root dia.	ϕ6.7
Number of circuit	1.6×2
Shaft, Nut material	SCM415H
Surface hardness	HRC58～62 (Thread area)
Anti-rust treatment	Anti-rust oil

Supported-side end-journal profile

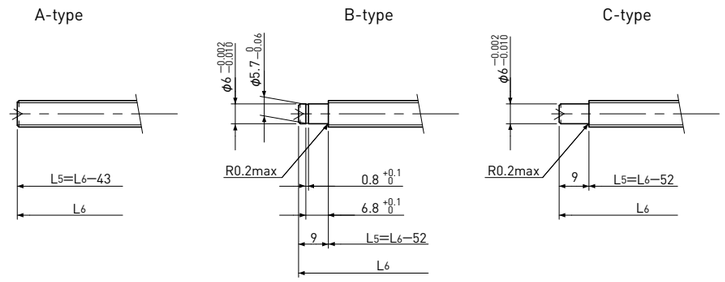

L5:Thread length after end-journal machining.
L6:Total length after end-journal machining.

Support-unit Recommendation			
	Supported-side	:	MSU-6CS/6GS
	Fixed-side	:	MSU-6C/6G

D-type : Other than the above.

Unit:mm

Ball Screw Model	Travel	Grade	Shaft length L1	L2	L3	L4	Lead accuracy Travel deviation ep	Variation Vu	Total Run-out	Axial play	Preload Torque Nm	Basic Load Rating N Dynamic Ca	Static Coa
SG0812-097R140C5	70	C5	97	103	110	140	±0.018	0.018	0.050	～0.005	—	2200	4000
SG0812-207R250C5	180	C5	207	213	220	250	±0.023	0.018	0.065				

Note) Please refer to page A206 for order code of end-journal machining.

Standard products in stock SG series

SG0820 | Shaft dia. φ8 Lead 20mm | C5

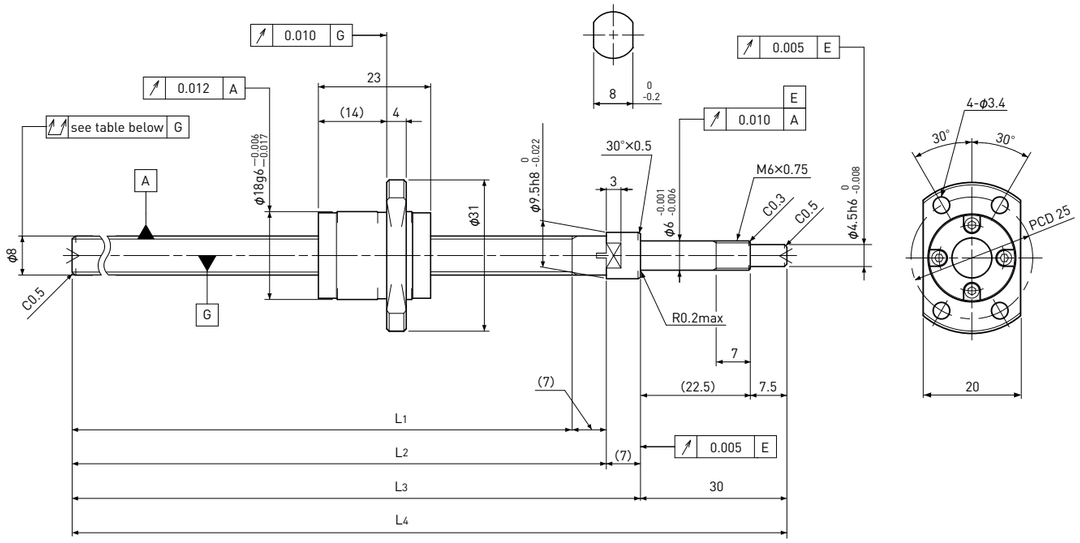

Unit:mm

Ball Screw Specifications	
Ball size	φ1.5875
Number of thread	4
Thread direction	Right
Shaft root dia.	φ6.7
Number of circuit	0.7×4
Shaft, Nut material	SCM415H
Surface hardness	HRC58～62 (Thread area)
Anti-rust treatment	Anti-rust oil

Supported-side end-journal profile

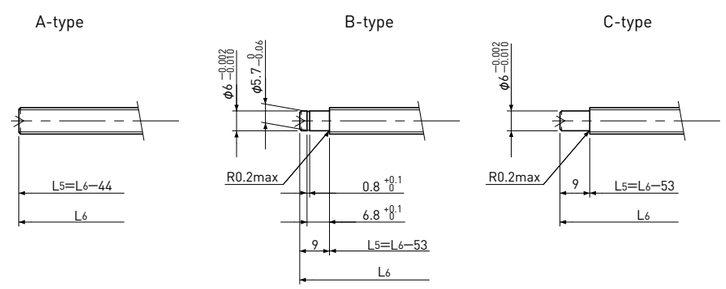

L_5:Thread length after end-journal machining.
L_6:Total length after end-journal machining.

Support-unit Recommendation			
	Supported-side	:	MSU-6CS/6GS
	Fixed-side	:	MSU-6C/6G

D-type : Other than the above.

Unit:mm

Ball Screw Model	Travel	Grade	Shaft length				Lead accuracy		Total Run-out	Axial play	Preload Torque Nm	Basic Load Rating N	
			L_1	L_2	L_3	L_4	Travel deviation e_p	Variation V_u				Dynamic Ca	Static Coa
SG0820-096R140C5	70	C5	96	103	110	140	±0.018	0.018	0.050	～0.005	—	1650	3150
SG0820-206R250C5	180	C5	206	213	220	250	±0.023	0.018	0.065				

Note)Please refer to page A206 for order code of end-journal machining.

Standard products in stock SG series

SG1001 | Shaft dia. φ10 Lead 1mm | C3&C5

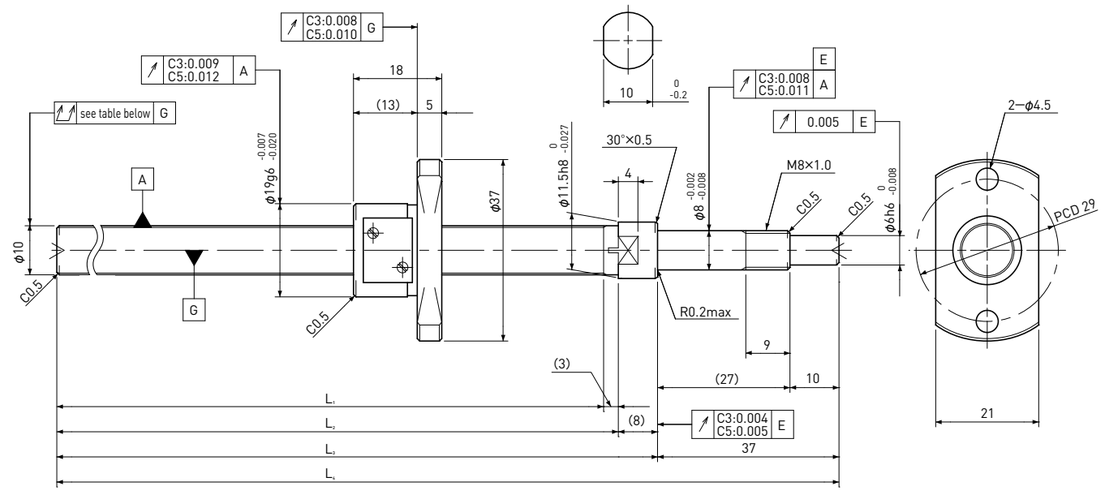

Unit:mm

Ball Screw Specifications	
Ball size	φ0.8
Number of thread	1
Thread direction	Right
Shaft root dia.	φ9.3
Number of circuit	3.7×1
Shaft, Nut material	SCM415H
Surface hardness	HRC58～62 (Thread area)
Anti-rust treatment	Anti-rust oil

Supported-side end-journal profile

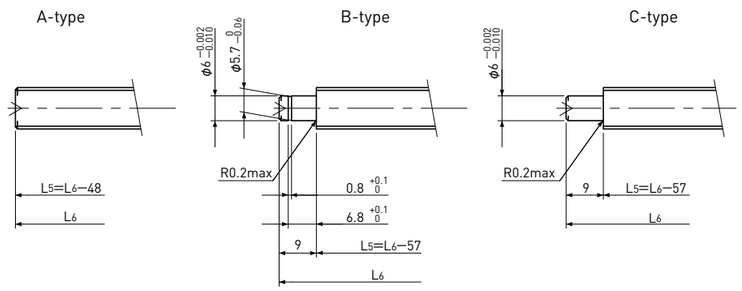

L_5:Thread length after end-journal machining.
L_6:Total length after end-journal machining.

Support-unit Recommendation			
	Supported-side	:	MSU-8CS/8GS
	Fixed-side	:	MSU-8C/8G

D-type : Other than the above.

Unit:mm

Ball Screw Model	Travel	Grade	Shaft length				Lead accuracy		Total Run-out	Axial play	Preload Torque Nm	Basic Load Rating N	
			L_1	L_2	L_3	L_4	Travel deviation e_p	Variation V_u				Dynamic Ca	Static Coa
SG1001-112R160C3	90	C3	112	115	123	160	±0.010	0.008	0.035	0 Spacer Ball (1:1)	～0.020	530	1000
SG1001-162R210C3	140	C3	162	165	173	210	±0.010	0.008	0.040				
SG1001-212R260C3	190	C3	212	215	223	260	±0.012	0.008	0.040				
SG1001-262R310C3	240	C3	262	265	273	310	±0.012	0.008	0.040				
SG1001-112R160C5	90	C5	112	115	123	160	±0.020	0.018	0.040	～0.005	—	840	2000
SG1001-162R210C5	140	C5	162	165	173	210	±0.020	0.018	0.055				
SG1001-212R260C5	190	C5	212	215	223	260	±0.023	0.018	0.055				
SG1001-262R310C5	240	C5	262	265	273	310	±0.023	0.018	0.055				

Note)Please refer to page A206 for order code of end-journal machining.

Standard products in stock SG series

SG1002 | Shaft dia. φ10 Lead 2mm | C3&C5

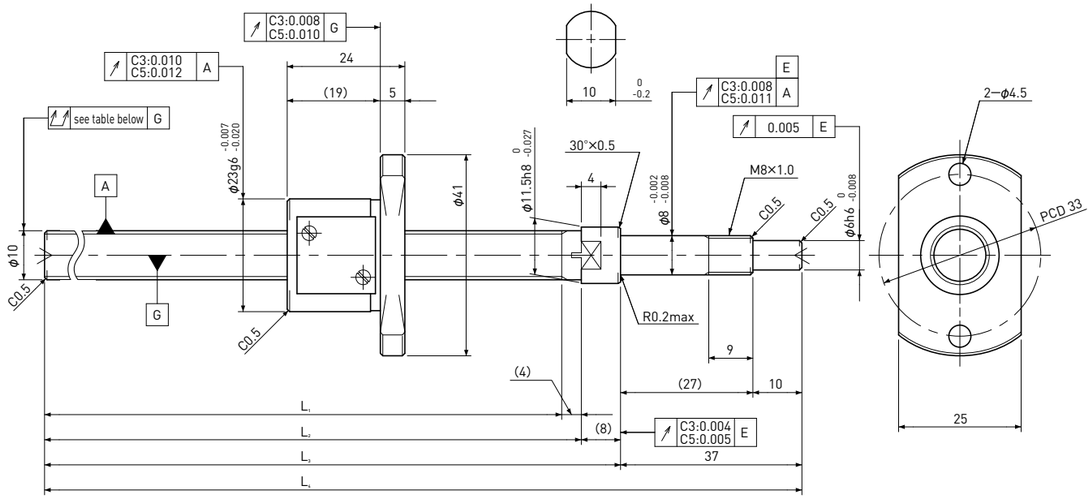

Unit:mm

Ball Screw Specifications	
Ball size	φ1.5875
Number of thread	1
Thread direction	Right
Shaft root dia.	φ8.6
Number of circuit	3.7×1
Shaft, Nut material	SCM415H
Surface hardness	HRC58～62 (Thread area)
Anti-rust treatment	Anti-rust oil

Supported-side end-journal profile

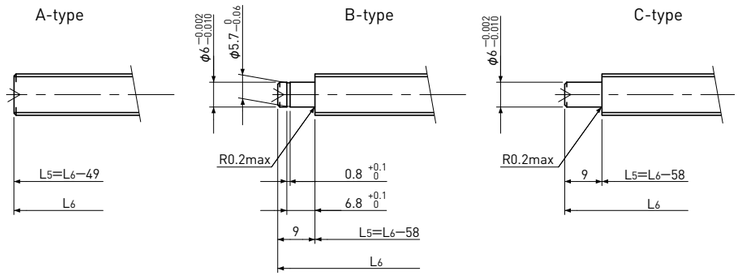

L5:Thread length after end-journal machining.
L6:Total length after end-journal machining.

Support-unit Recommendation			
	Supported-side	:	MSU-8CS/8GS
	Fixed-side	:	MSU-8C/8G

D-type : Other than the above.

Unit:mm

Ball Screw Model	Travel	Grade	Shaft length L1	L2	L3	L4	Lead accuracy Travel deviation ep	Variation Vu	Total Run-out	Axial play	Preload Torque Nm	Basic Load Rating N Dynamic Ca	Static Coa
SG1002-111R160C3	85	C3	111	115	123	160	±0.010	0.008	0.035	0 Spacer Ball (1:1)	0.006～0.030	1750	2700
SG1002-161R210C3	135	C3	161	165	173	210	±0.010	0.008	0.040				
SG1002-211R260C3	185	C3	211	215	223	260	±0.012	0.008	0.040				
SG1002-261R310C3	235	C3	261	265	273	310	±0.012	0.008	0.040				
SG1002-111R160C5	85	C5	111	115	123	160	±0.020	0.018	0.040	～0.005	—	2700	5300
SG1002-161R210C5	135	C5	161	165	173	210	±0.020	0.018	0.055				
SG1002-211R260C5	185	C5	211	215	223	260	±0.023	0.018	0.055				
SG1002-261R310C5	235	C5	261	265	273	310	±0.023	0.018	0.055				

Note)Please refer to page A206 for order code of end-journal machining.

Standard products in stock SG series

SG1004 | Shaft dia. φ10 Lead 4mm | C3&C5

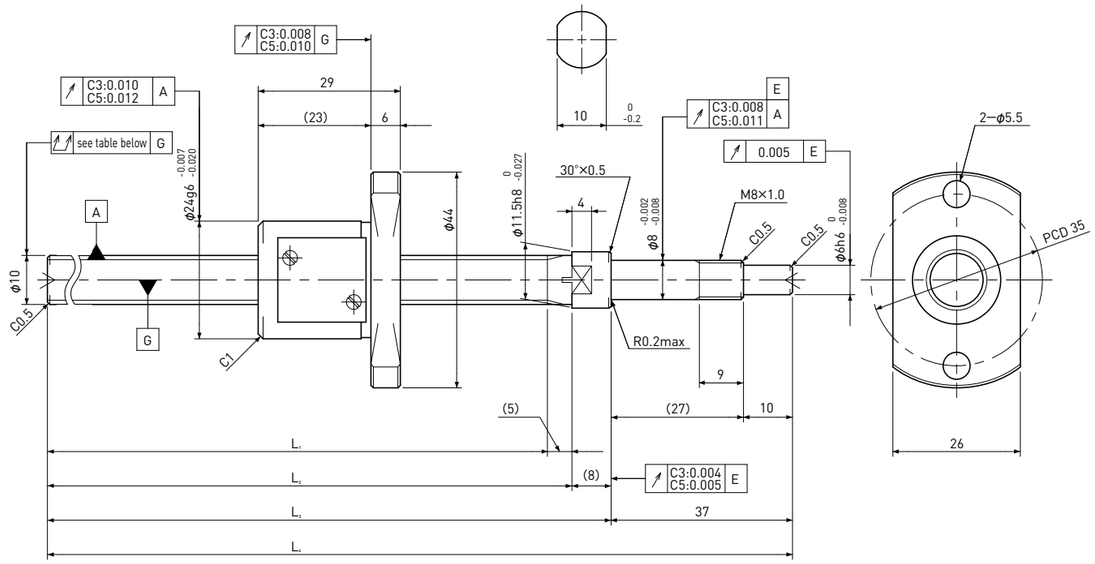

Unit:mm

Ball Screw Specifications	
Ball size	φ2.0
Number of thread	1
Thread direction	Right
Shaft root dia.	φ8.2
Number of circuit	2.7×1
Shaft, Nut material	SCM415H
Surface hardness	HRC58～62 (Thread area)
Anti-rust treatment	Anti-rust oil

Supported-side end-journal profile

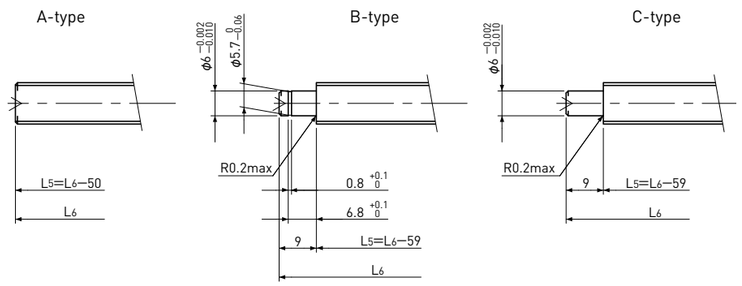

L5:Thread length after end-journal machining.
L6:Total length after end-journal machining.

Support-unit Recommendation			
	Supported-side	:	MSU-8CS/8GS
	Fixed-side	:	MSU-8C/8G

D-type : Other than the above.

Unit:mm

Ball Screw Model	Travel	Grade	Shaft length L1	L2	L3	L4	Lead accuracy Travel deviation ep	Variation Vu	Total Run-out	Axial play	Preload Torque Nm	Basic Load Rating N Dynamic Ca	Static Coa
SG1004-110R160C3	80	C3	110	115	123	160	±0.010	0.008	0.035	0 Spacer Ball (1:1)	0.005～0.040	1800	2600
SG1004-260R310C3	230	C3	260	265	273	310	±0.012	0.008	0.040				
SG1004-110R160C5	80	C5	110	115	123	160	±0.020	0.018	0.040	～0.005	—	3000	5200
SG1004-260R310C5	230	C5	260	265	273	310	±0.023	0.018	0.055				

Note)Please refer to page A206 for order code of end-journal machining.

Standard products in stock SG series

SG1005 | Shaft dia. ϕ10 Lead 5mm | C3&C5

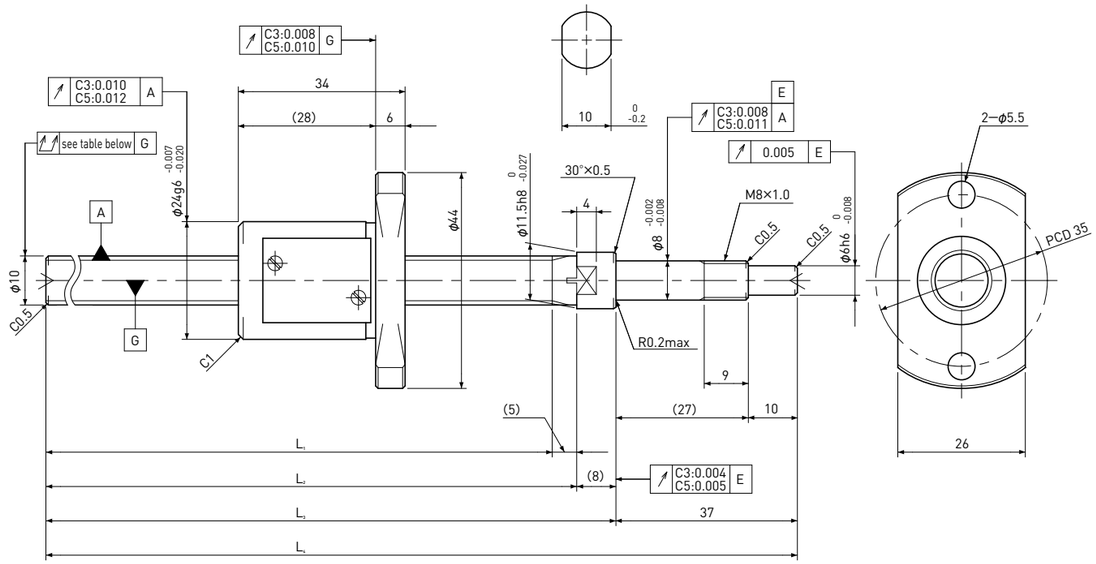

Unit：mm

Ball Screw Specifications

Ball size	ϕ2.0
Number of thread	1
Thread direction	Right
Shaft root dia.	ϕ8.2
Number of circuit	2.7×1
Shaft, Nut material	SCM415H
Surface hardness	HRC58～62 (Thread area)
Anti-rust treatment	Anti-rust oil

Supported-side end-journal profile

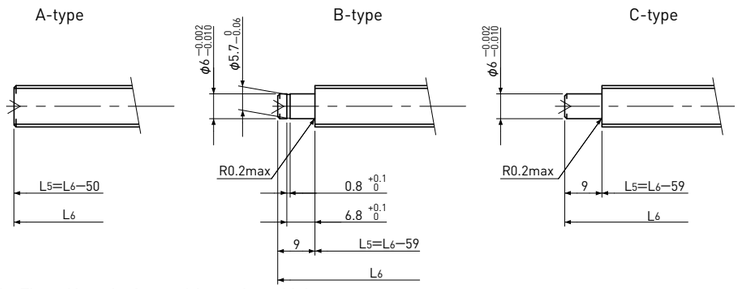

L5：Thread length after end-journal machining.
L6：Total length after end-journal machining.

Support-unit Recommendation		
Supported-side	:	MSU-8CS/8GS
Fixed-side	:	MSU-8C/8G

D-type : Other than the above.

Unit：mm

Ball Screw Model	Travel	Grade	Shaft length L1	L2	L3	L4	Lead accuracy Travel deviation ep	Variation Vu	Total Run-out	Axial play	Preload Torque Nm	Basic Load Rating N Dynamic Ca	Static Coa
SG1005-110R160C3	75	C3	110	115	123	160	±0.010	0.008	0.035	0 Spacer Ball (1:1)	0.005～0.040	1800	2600
SG1005-260R310C3	225	C3	260	265	273	310	±0.012	0.008	0.040				
SG1005-110R160C5	75	C5	110	115	123	160	±0.020	0.018	0.040	～0.005	—	3000	5200
SG1005-260R310C5	225	C5	260	265	273	310	±0.023	0.018	0.055				

Note) Please refer to page A206 for order code of end-journal machining.

Standard products in stock SG series

SG1010 | Shaft dia. ϕ10 Lead 10mm | C5

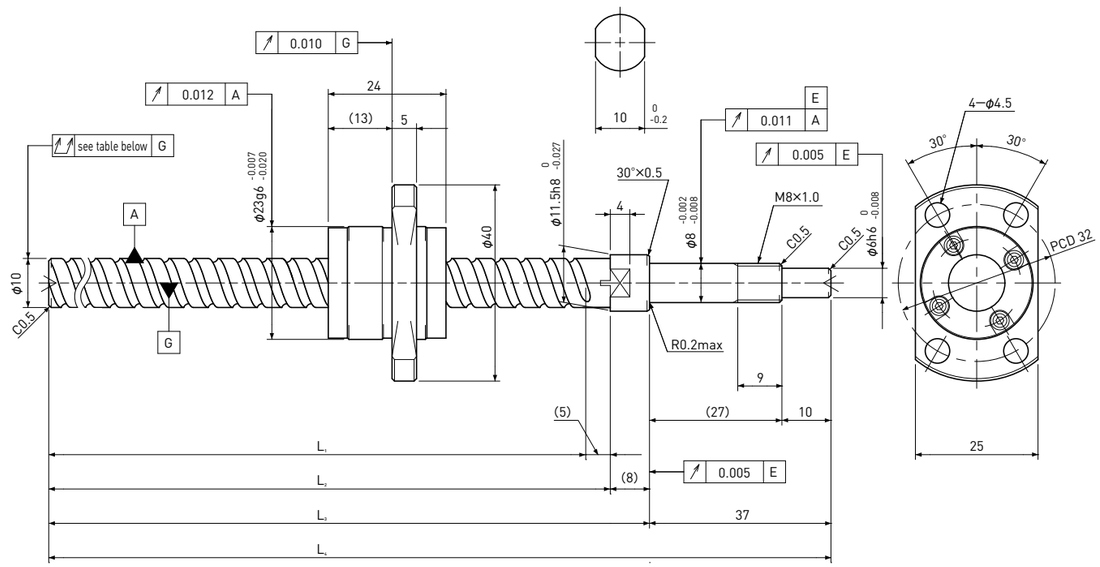

Unit：mm

Ball Screw Specifications

Ball size	ϕ2.0
Number of thread	2
Thread direction	Right
Shaft root dia.	ϕ8.4
Number of circuit	1.6×2
Shaft, Nut material	SCM415H
Surface hardness	HRC58～62 (Thread area)
Anti-rust treatment	Anti-rust oil

Supported-side end-journal profile

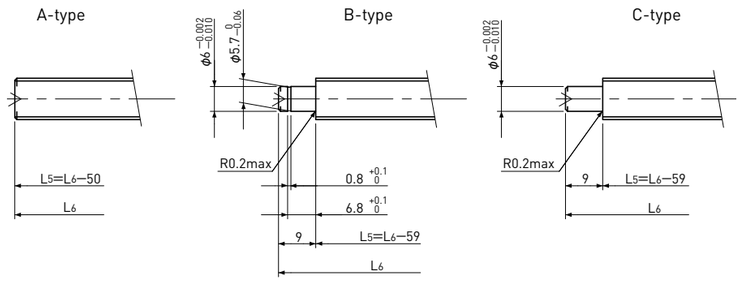

L5：Thread length after end-journal machining.
L6：Total length after end-journal machining.

Support-unit Recommendation		
Supported-side	:	MSU-8CS/8GS
Fixed-side	:	MSU-8C/8G

D-type : Other than the above.

Unit：mm

Ball Screw Model	Travel	Grade	Shaft length L1	L2	L3	L4	Lead accuracy Travel deviation ep	Variation Vu	Total Run-out	Axial play	Preload Torque Nm	Basic Load Rating N Dynamic Ca	Static Coa
SG1010-110R160C5	85	C5	110	115	123	160	±0.020	0.018	0.040	～0.005	—	3300	5900
SG1010-260R310C5	235	C5	260	265	273	310	±0.023	0.018	0.055				

Note) Please refer to page A206 for order code of end-journal machining.

Standard products in stock SG series

SG1015 | Shaft dia. ϕ10 Lead 15mm | C5

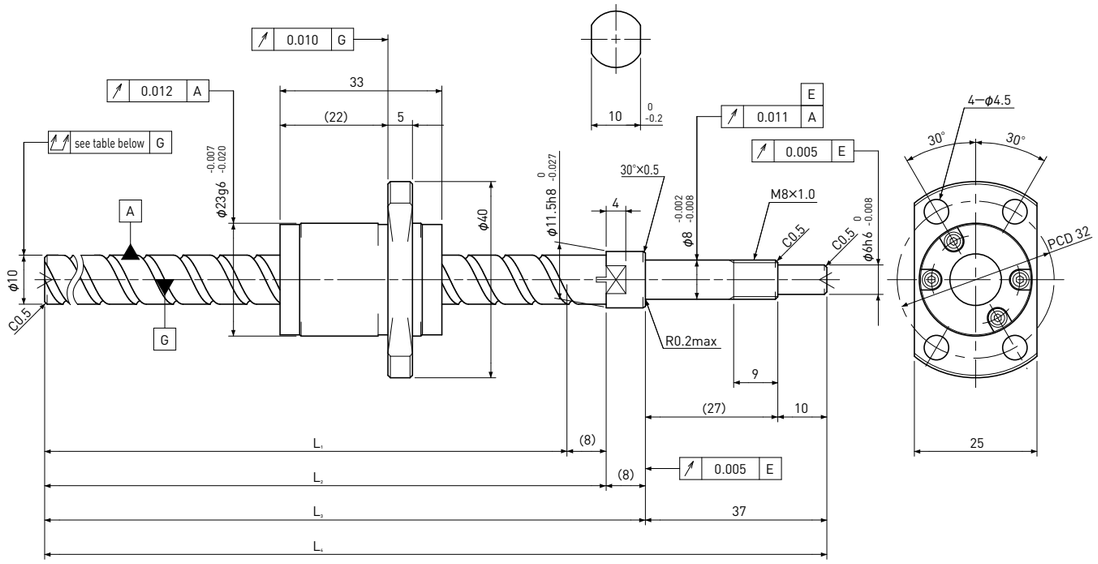

Unit:mm

Ball Screw Specifications	
Ball size	ϕ2.0
Number of thread	2
Thread direction	Right
Shaft root dia.	ϕ8.4
Number of circuit	1.6×2
Shaft, Nut material	SCM415H
Surface hardness	HRC58～62 (Thread area)
Anti-rust treatment	Anti-rust oil

Supported-side end-journal profile

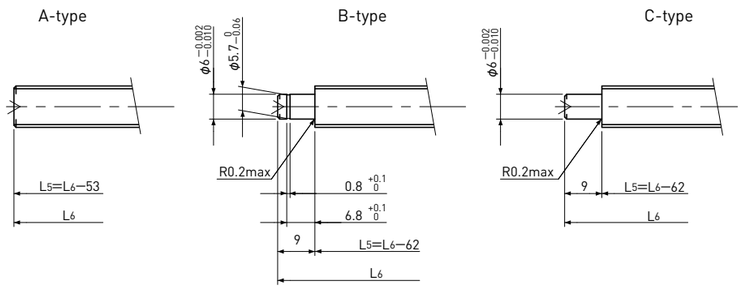

L_5:Thread length after end-journal machining.
L_6:Total length after end-journal machining.

Support-unit Recommendation		
	Supported-side :	MSU-8CS/8GS
	Fixed-side :	MSU-8C/8G

D-type : Other than the above.

Unit:mm

Ball Screw Model	Travel	Grade	Shaft length				Lead accuracy		Total Run-out	Axial play	Preload Torque Nm	Basic Load Rating N	
			L_1	L_2	L_3	L_4	Travel deviation e_p	Variation V_u				Dynamic Ca	Static Coa
SG1015-107R160C5	70	C5	107	115	123	160	±0.020	0.018	0.040	～0.005	—	3300	6400
SG1015-257R310C5	220	C5	257	265	273	310	±0.023	0.018	0.055				

Note)Please refer to page A206 for order code of end-journal machining.

Standard products in stock SG series

SG1202 | Shaft dia. ϕ12 Lead 2mm | C3&C5

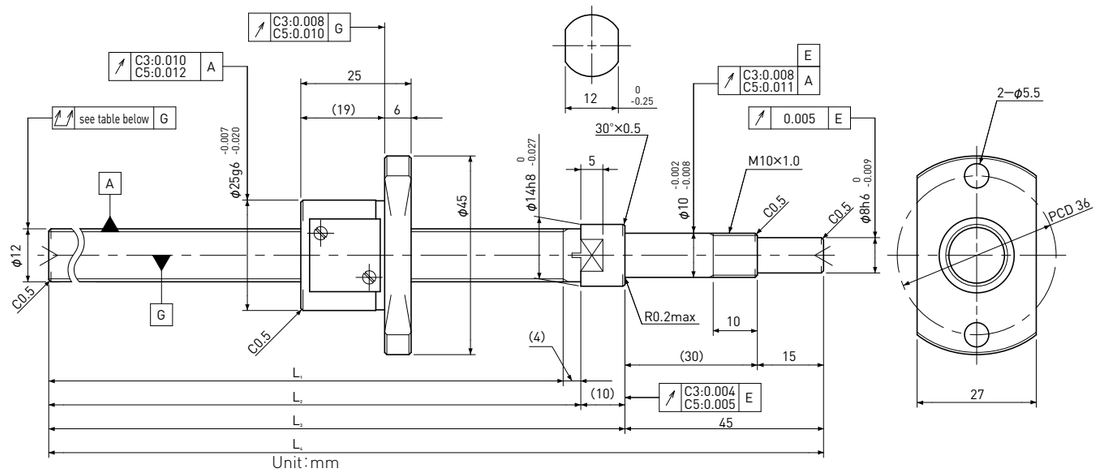

Unit:mm

Ball Screw Specifications	
Ball size	ϕ1.5875
Number of thread	1
Thread direction	Right
Shaft root dia.	ϕ10.6
Number of circuit	3.7×1
Shaft, Nut material	SCM415H
Surface hardness	HRC58～62 (Thread area)
Anti-rust treatment	Anti-rust oil

Supported-side end-journal profile

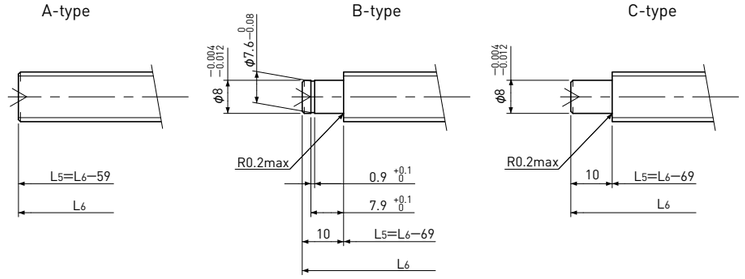

L_5:Thread length after end-journal machining.
L_6:Total length after end-journal machining.

Support-unit Recommendation		
	Supported-side :	—
	Fixed-side :	—

D-type : Other than the above.

Unit:mm

Ball Screw Model	Travel	Grade	Shaft length				Lead accuracy		Total Run-out	Axial play	Preload Torque Nm	Basic Load Rating N	
			L_1	L_2	L_3	L_4	Travel deviation e_p	Variation V_u				Dynamic Ca	Static Coa
SG1202-141R200C3	115	C3	141	145	155	200	±0.010	0.008	0.035	0 Spacer Ball (1:1)	0.008～0.040	1900	3200
SG1202-191R250C3	165	C3	191	195	205	250	±0.010	0.008	0.040				
SG1202-241R300C3	215	C3	241	245	255	300	±0.012	0.008	0.040				
SG1202-291R350C3	265	C3	291	295	305	350	±0.012	0.008	0.050				
SG1202-341R400C3	315	C3	341	345	355	400	±0.013	0.010	0.050				
SG1202-141R200C5	115	C5	141	145	155	200	±0.020	0.018	0.040	～0.005	—	3000	6400
SG1202-191R250C5	165	C5	191	195	205	250	±0.020	0.018	0.055				
SG1202-241R300C5	215	C5	241	245	255	300	±0.023	0.018	0.055				
SG1202-291R350C5	265	C5	291	295	305	350	±0.023	0.018	0.065				
SG1202-341R400C5	315	C5	341	345	355	400	±0.025	0.020	0.065				

Note)Please refer to page A206 for order code of end-journal machining.

Standard products in stock SG series

SG1210 | Shaft dia. φ12 Lead 10mm | C5

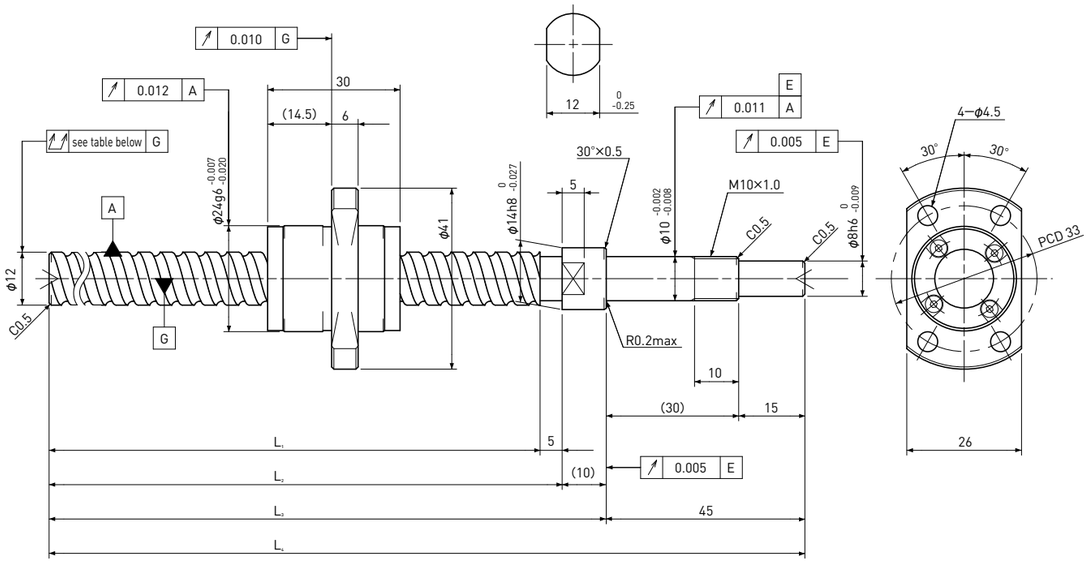

Unit:mm

Ball Screw Specifications	
Ball size	φ2.381
Number of thread	2
Thread direction	Right
Shaft root dia.	φ10.2
Number of circuit	1.7×2
Shaft, Nut material	SCM415H
Surface hardness	HRC58～62 (Thread area)
Anti-rust treatment	Anti-rust oil

Supported-side end-journal profile

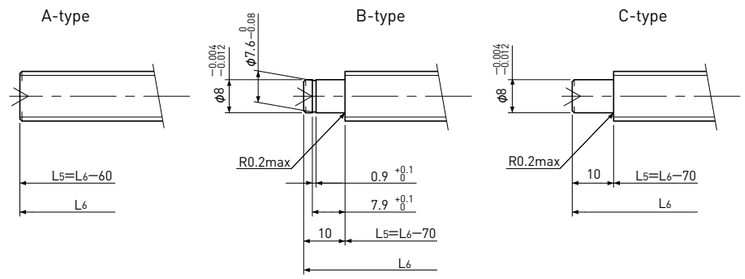

L5:Thread length after end-journal machining.
L6:Total length after end-journal machining.

Support-unit Recommendation		
	Supported-side	: —
	Fixed-side	: —

D-type : Other than the above.

Unit:mm

Ball Screw Model	Travel	Grade	Shaft length				Lead accuracy		Total Run-out	Axial play	Preload Torque Nm	Basic Load Rating N	
			L1	L2	L3	L4	Travel deviation ep	Variation Vu				Dynamic Ca	Static Coa
SG1210-240R300C5	210	C5	240	245	255	300	±0.023	0.018	0.055	～0.005	—	5100	9800
SG1210-340R400C5	310	C5	340	345	355	400	±0.025	0.020	0.065				

Note) Please refer to page A206 for order code of end-journal machining.

Standard products in stock SG series

SG1402 | Shaft dia. φ14 Lead 2mm | C3&C5

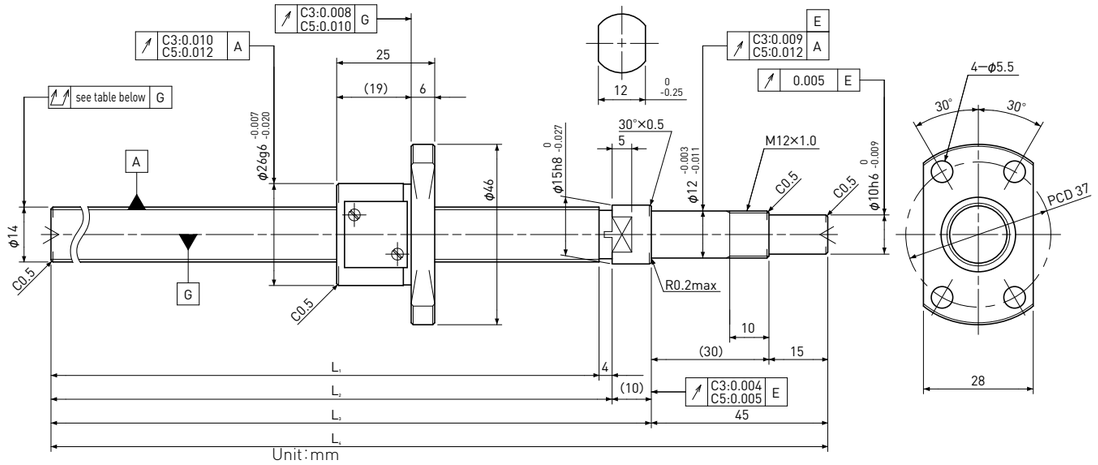

Unit:mm

Ball Screw Specifications	
Ball size	φ1.5875
Number of thread	1
Thread direction	Right
Shaft root dia.	φ12.6
Number of circuit	3.7×1
Shaft, Nut material	SCM415H
Surface hardness	HRC58～62 (Thread area)
Anti-rust treatment	Anti-rust oil

Supported-side end-journal profile

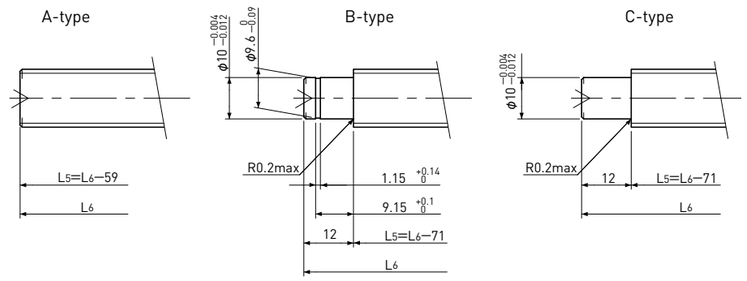

L5:Thread length after end-journal machining.
L6:Total length after end-journal machining.

Support-unit Recommendation		
	Supported-side	: —
	Fixed-side	: —

D-type : Other than the above.

Unit:mm

Ball Screw Model	Travel	Grade	Shaft length				Lead accuracy		Total Run-out	Axial play	Preload Torque Nm	Basic Load Rating N	
			L1	L2	L3	L4	Travel deviation ep	Variation Vu				Dynamic Ca	Static Coa
SG1402-141R200C3	115	C3	141	145	155	200	±0.010	0.008	0.025	0 Spacer Ball (1:1)	0.010～0.050	2000	3800
SG1402-191R250C3	165	C3	191	195	205	250	±0.010	0.008	0.030				
SG1402-241R300C3	215	C3	241	245	255	300	±0.012	0.008	0.030				
SG1402-291R350C3	265	C3	291	295	305	350	±0.012	0.008	0.040				
SG1402-391R450C3	365	C3	391	395	405	450	±0.013	0.010	0.050				
SG1402-141R200C5	115	C5	141	145	155	200	±0.020	0.018	0.040	～0.005	—	3200	7500
SG1402-191R250C5	165	C5	191	195	205	250	±0.020	0.018	0.045				
SG1402-241R300C5	215	C5	241	245	255	300	±0.023	0.018	0.045				
SG1402-291R350C5	265	C5	291	295	305	350	±0.023	0.018	0.055				
SG1402-391R450C5	365	C5	391	395	405	450	±0.025	0.020	0.060				

Note) Please refer to page A206 for order code of end-journal machining.

Standard products in stock SG series

SG1404 | Shaft dia. φ14 Lead 4mm | C3&C5

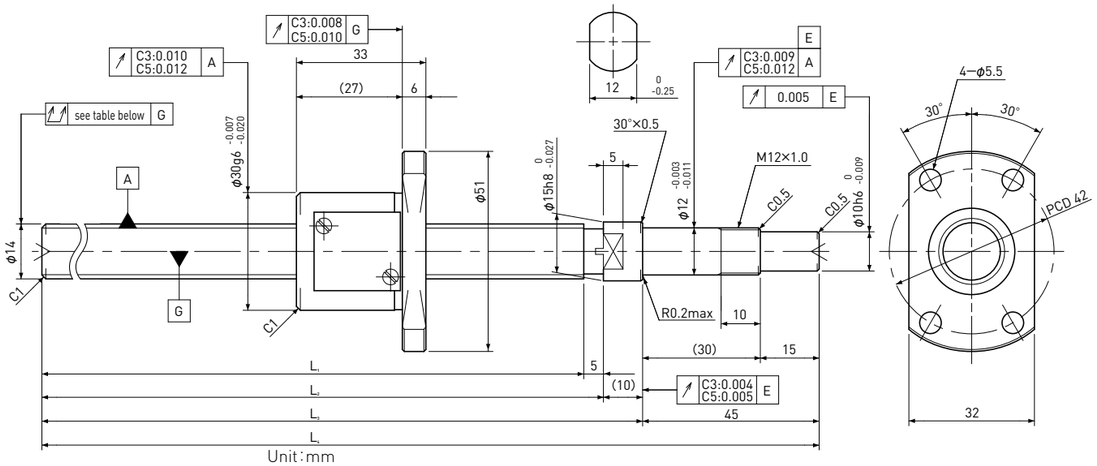

Unit : mm

Ball Screw Specifications	
Ball size	φ2.381
Number of thread	1
Thread direction	Right
Shaft root dia.	φ11.8
Number of circuit	3.7×1
Shaft, Nut material	SCM415H
Surface hardness	HRC58～62 (Thread area)
Anti-rust treatment	Anti-rust oil

Supported-side end-journal profile

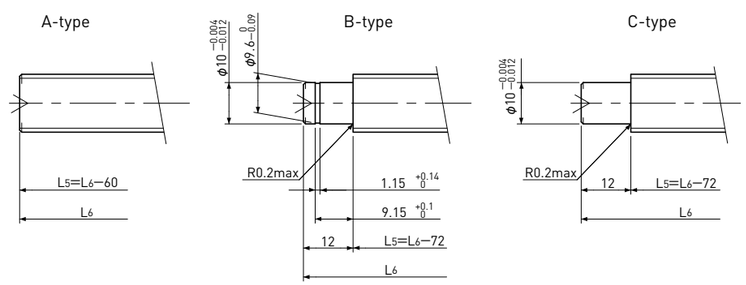

L5 : Thread length after end-journal machining.
L6 : Total length after end-journal machining.

Support-unit Recommendation		
	Supported-side :	—
	Fixed-side :	—

D-type : Other than the above.

Unit : mm

Ball Screw Model	Travel	Grade	Shaft length L1	L2	L3	L4	Lead accuracy Travel deviation ep	Variation Vu	Total Run-out	Axial play	Preload Torque Nm	Basic Load Rating N Dynamic Ca	Static Coa
SG1404-190R250C3	155	C3	190	195	205	250	±0.010	0.008	0.030	0 Spacer Ball (1:1)	0.020～0.070	3600	5800
SG1404-240R300C3	205	C3	240	245	255	300	±0.012	0.008	0.030				
SG1404-290R350C3	255	C3	290	295	305	350	±0.012	0.008	0.040				
SG1404-390R450C3	355	C3	390	395	405	450	±0.013	0.010	0.050				
SG1404-490R550C3	455	C3	490	495	505	550	±0.015	0.010	0.055				
SG1404-190R250C5	155	C5	190	195	205	250	±0.020	0.018	0.045	～0.005	—	5700	11600
SG1404-240R300C5	205	C5	240	245	255	300	±0.023	0.018	0.045				
SG1404-290R350C5	255	C5	290	295	305	350	±0.023	0.018	0.055				
SG1404-390R450C5	355	C5	390	395	405	450	±0.025	0.020	0.060				
SG1404-490R550C5	455	C5	490	495	505	550	±0.027	0.020	0.075				

Note) Please refer to page A206 for order code of end-journal machining.

Standard products in stock SG series

SG1505 | Shaft dia. φ15 Lead 5mm | C5

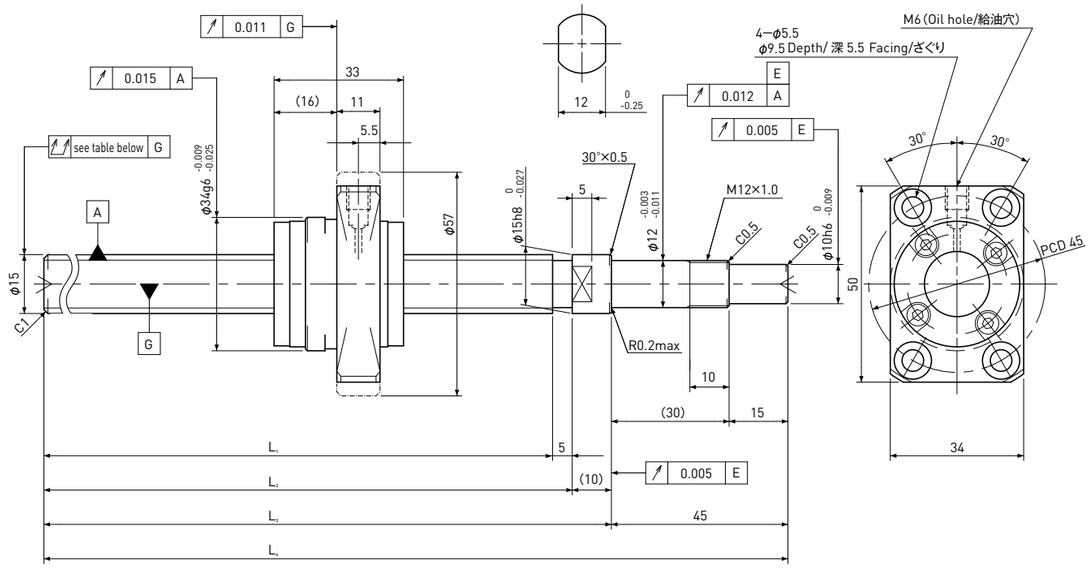

Unit : mm

Ball Screw Specifications	
Ball size	φ3.175
Number of thread	1
Thread direction	Right
Shaft root dia.	φ12.2
Number of circuit	3.7×1
Shaft, Nut material	SCM415H
Surface hardness	HRC58～62 (Thread area)
Anti-rust treatment	Anti-rust oil

Supported-side end-journal profile

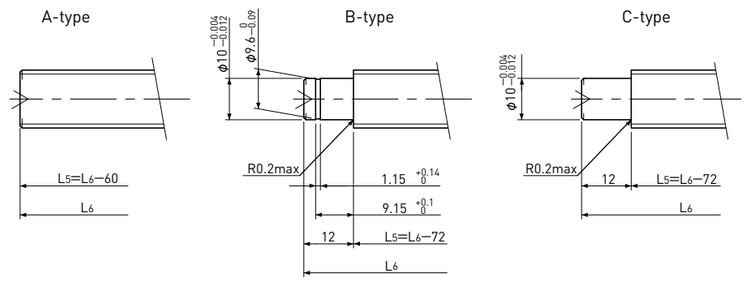

L5 : Thread length after end-journal machining.
L6 : Total length after end-journal machining.

Support-unit Recommendation		
	Supported-side :	—
	Fixed-side :	—

D-type : Other than the above.

Unit : mm

Ball Screw Model	Travel	Grade	Shaft length L1	L2	L3	L4	Lead accuracy Travel deviation ep	Variation Vu	Total Run-out	Axial play	Preload Torque Nm	Basic Load Rating N Dynamic Ca	Static Coa
SG1505-340R400C5	305	C5	340	345	355	400	±0.025	0.020	0.055	～0.005	—	8900	17000
SG1505-540R600C5	505	C5	540	545	555	600	±0.030	0.023	0.075				

Note) Please refer to page A206 for order code of end-journal machining.

Standard products in stock SG series

SG1510 | Shaft dia.φ15 Lead 10mm | C5

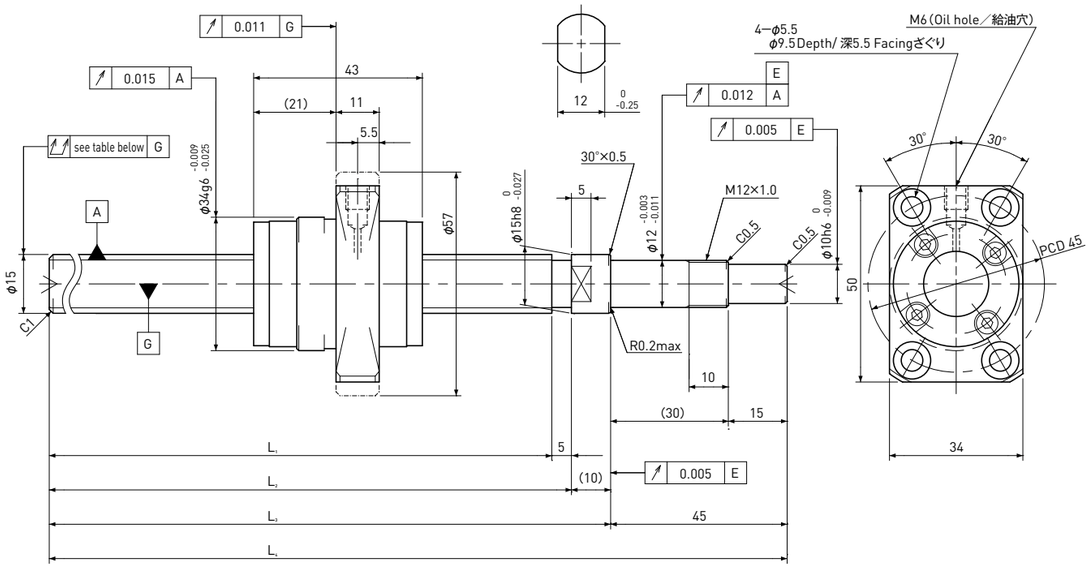

Unit:mm

Ball Screw Specifications

Ball size	φ3.175
Number of thread	2
Thread direction	Right
Shaft root dia.	φ12.2
Number of circuit	2.7×2
Shaft, Nut material	SCM415H
Surface hardness	HRC58～62 (Thread area)
Anti-rust treatment	Anti-rust oil

Supported-side end-journal profile

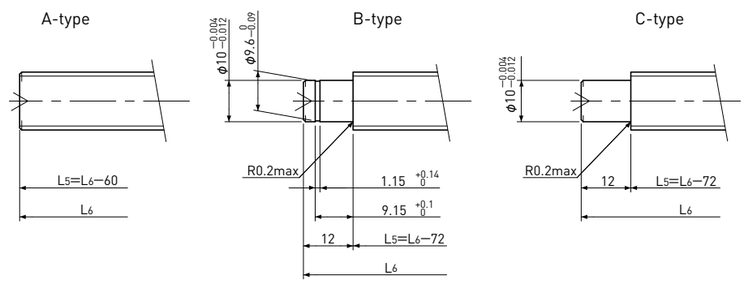

L5:Thread length after end-journal machining.
L6:Total length after end-journal machining.

Support-unit Recommendation		
	Supported-side	: —
	Fixed-side	: —

D-type : Other than the above.

Unit:mm

Ball Screw Model	Travel	Grade	Shaft length L1	L2	L3	L4	Lead accuracy Travel deviation ep	Variation Vu	Total Run-out	Axial play	Preload Torque Nm	Basic Load Rating N Dynamic Ca	Static Coa
SG1510-340R400C5	295	C5	340	345	355	400	±0.025	0.020	0.055	～0.005	—	12000	25000
SG1510-540R600C5	495	C5	540	545	555	600	±0.030	0.023	0.075				

Note)Please refer to page A206 for order code of end-journal machining.

Standard products in stock SG series

SG1520 | Shaft dia.φ15 Lead 20mm | C5

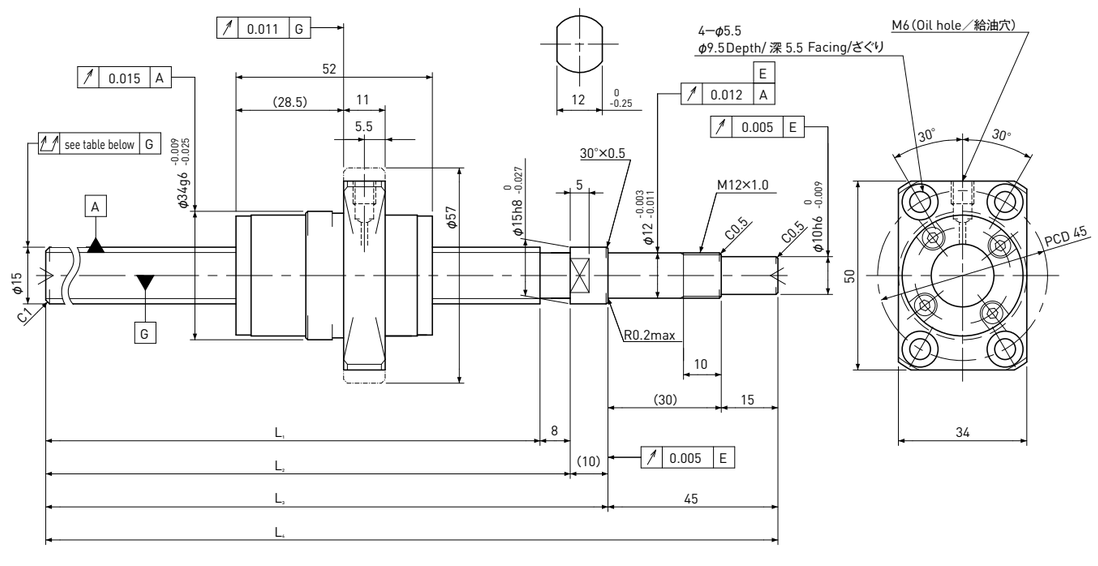

Unit:mm

Ball Screw Specifications

Ball size	φ3.175
Number of thread	2
Thread direction	Right
Shaft root dia.	φ12.4
Number of circuit	1.7×2
Shaft, Nut material	SCM415H
Surface hardness	HRC58～62 (Thread area)
Anti-rust treatment	Anti-rust oil

Supported-side end-journal profile

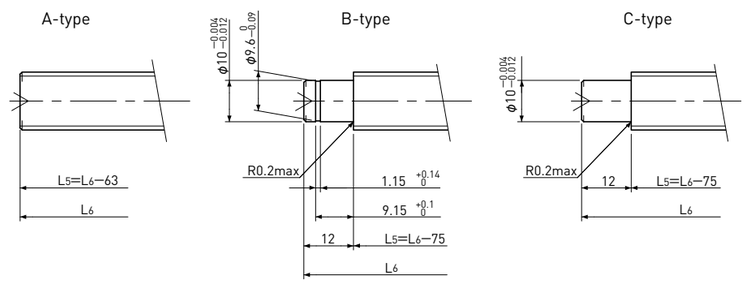

L5:Thread length after end-journal machining.
L6:Total length after end-journal machining.

Support-unit Recommendation		
	Supported-side	: —
	Fixed-side	: —

D-type : Other than the above.

Unit:mm

Ball Screw Model	Travel	Grade	Shaft length L1	L2	L3	L4	Lead accuracy Travel deviation ep	Variation Vu	Total Run-out	Axial play	Preload Torque Nm	Basic Load Rating N Dynamic Ca	Static Coa
SG1520-337R400C5	285	C5	337	345	355	400	±0.025	0.020	0.055	～0.005	—	8000	16000
SG1520-537R600C5	485	C5	537	545	555	600	±0.030	0.023	0.075				

Note)Please refer to page A206 for order code of end-journal machining.

SD series　Standardized Bi-directional Ball Screws

SD series are economical Ball Screws which moves bi-directionally with a shaft, and perform centering, precise positioning. There are Precision Ball Screws C3, C5 grade.

●Combination of Shaft nominal dia. & Lead

Unit：mm

Shaft dia. \ Lead	1	2
4	A239	
6	A240	
8	A241	A242
10		A243
12		A244

Note 1)The number in a table：showing a page in this catalogue.

●Accuracy Grade & Axial play

Accuracy grades of SD series (Standardized Bi-directional Precision Ball Screws) are 2 kinds, C3 and C5(JIS B 1192-3). Axial play are 0(Preload：C3)and 0.005mm or less(C5) corresponding to accuracy grades in stock.

●Material & Surface hardness

Shafts and Nuts of SD series(Standardized Bi-directional Precision Ball Screws) adopts SCM415(carburizing and quenching), surface hardness of Ball Screw part is HRC58-62.

●Lubrication

SD series(Standardized Bi-directional Precision Ball Screws) are applied with anti-rust oil for rust prevention when unfinished end journal. Since anti-rust oil is not lubricant, apply Grease or lubrication oil before using Ball Screws.
If there is no specific instruction, KSS would recommend our original Grease (MSG No.2) as standard lubricant. Please feel free to contact us.

●End-journal profile

End-journal configuration of SD series (Standardized Bi-directional Precision Ball Screws) is not standardized. Please ask for KSS regarding additional machining with a drawing which shows end-journal profile.

●Model number notation

Model number notation of SD series(Standardized Bi-directional Precision Ball Screws) is as follows.

SD	08	01	—	120	L	120	R	300	C5
①	②	③		④	⑤	⑥	⑦	⑧	⑨

①Bi-directional Ball Screws series No.
②Screw Shaft nominal diameter(mm)
③Lead(mm)
④Left-side thread length(mm)
⑤Left-hand
⑥Right-side thread length(mm)
⑦Right-hand
⑧Screw Shaft total length(mm)
⑨Accuracy grade(C3 or C5)

Standard products in stock SD series

SD0401 | Shaft dia. $\phi 4$ Lead 1mm | C3&C5

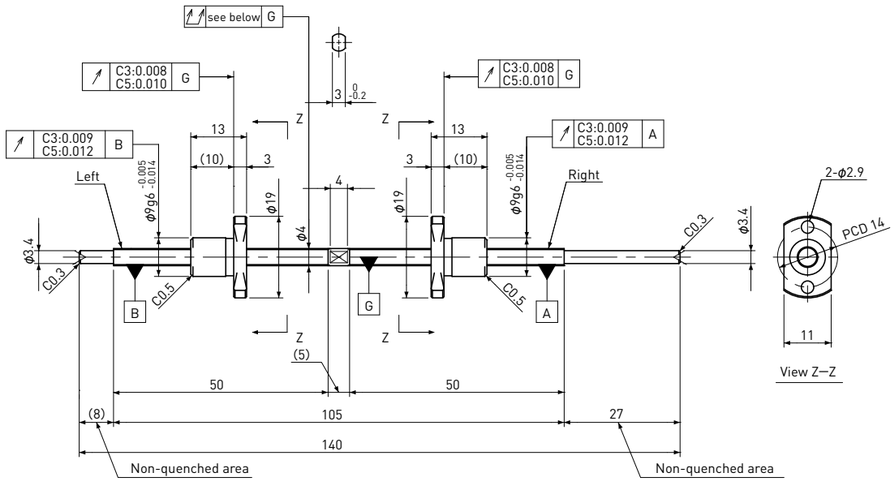

Unit:mm

Ball Screw Specifications	
Ball size	ϕ0.6
Number of thread	1
Thread direction	Left&Right
Shaft root dia.	ϕ3.4
Number of circuit	1×3
Shaft,Nut material	SCM415H
Surface hardness	HRC58～62 (Thread area)
Anti-rust treatment	Anti-rust oil

Unit:mm

Ball Screw Model	Travel	Grade	Lead accuracy		Total Run-out	Axial play	Preload Torque Nm	Basic Load Rating N	
			Travel deviation e_p	Variation V_u				Dynamic Ca	Static Coa
SD0401-50L50R140C3	35	C3	±0.008	0.008	0.035	0	～0.010	300	430
SD0401-50L50R140C5	35	C5	±0.018	0.018	0.050	～0.005	—		

Note 1) Please designate end-journal profile with your sketch.
Note 2) Absolute position of both Nuts related to the Screw Shaft is not under the control.

Standard products in stock SD series

SD0601 | Shaft dia. $\phi 6$ Lead 1mm | C3&C5

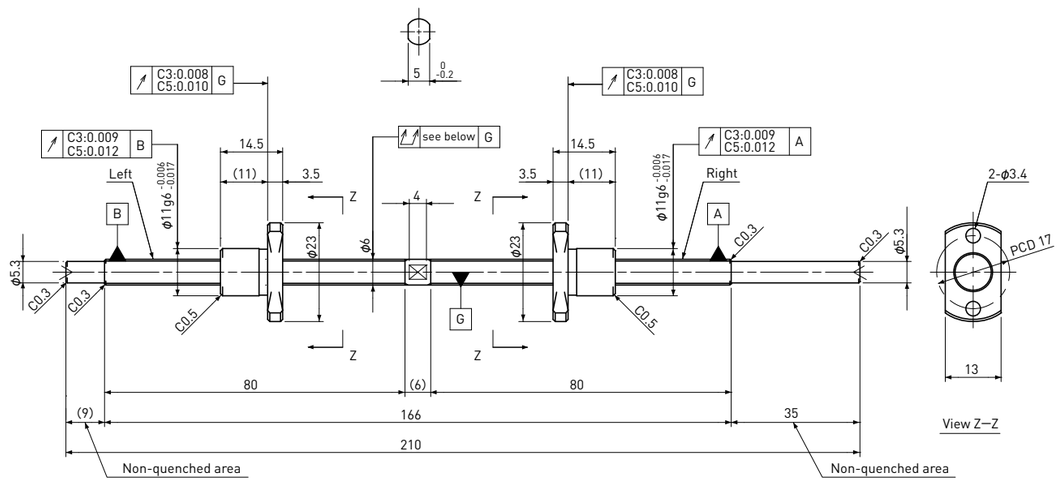

Unit:mm

Ball Screw Specifications	
Ball size	ϕ0.8
Number of thread	1
Thread direction	Left&Right
Shaft root dia.	ϕ5.3
Number of circuit	1×3
Shaft,Nut material	SCM415H
Surface hardness	HRC58～62 (Thread area)
Anti-rust treatment	Anti-rust oil

Unit:mm

Ball Screw Model	Travel	Grade	Lead accuracy		Total Run-out	Axial play	Preload Torque Nm	Basic Load Rating N	
			Travel deviation e_p	Variation V_u				Dynamic Ca	Static Coa
SD0601-80L80R210C3	65	C3	±0.008	0.008	0.050	0	～0.013	550	1000
SD0601-80L80R210C5	65	C5	±0.018	0.018	0.065	～0.005	—		

Note 1) Please designate end-journal profile with your sketch.
Note 2) Absolute position of both Nuts related to the Screw Shaft is not under the control.

Standard products in stock SD series

SD0801 | Shaft dia. ϕ8 Lead 1mm | C3&C5

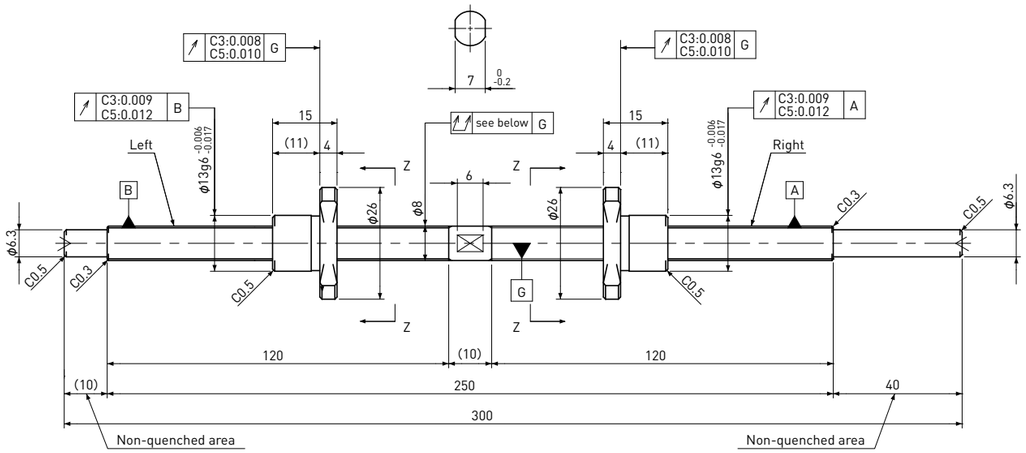

Unit:mm

Ball Screw Specifications	
Ball size	ϕ0.8
Number of thread	1
Thread direction	Left&Right
Shaft root dia.	ϕ7.3
Number of circuit	1×3
Shaft,Nut material	SCM415H
Surface hardness	HRC58～62 (Thread area)
Anti-rust treatment	Anti-rust oil

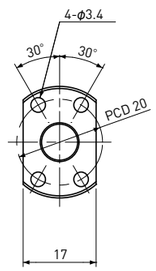

View Z–Z

Unit:mm

Ball Screw Model	Travel	Grade	Lead accuracy		Total Run-out	Axial play	Preload Torque Nm	Basic Load Rating N	
			Travel deviation e_p	Variation V_u				Dynamic Ca	Static Coa
SD0801-120L120R300C3	105	C3	±0.010	0.008	0.050	0	～0.018	650	1300
SD0801-120L120R300C5	105	C5	±0.020	0.018	0.065	～0.005	—		

Note 1) Please designate end-journal profile with your sketch.
Note 2) Absolute position of both Nuts related to the Screw Shaft is not under the control.

Standard products in stock SD series

SD0802 | Shaft dia. ϕ8 Lead 2mm | C3&C5

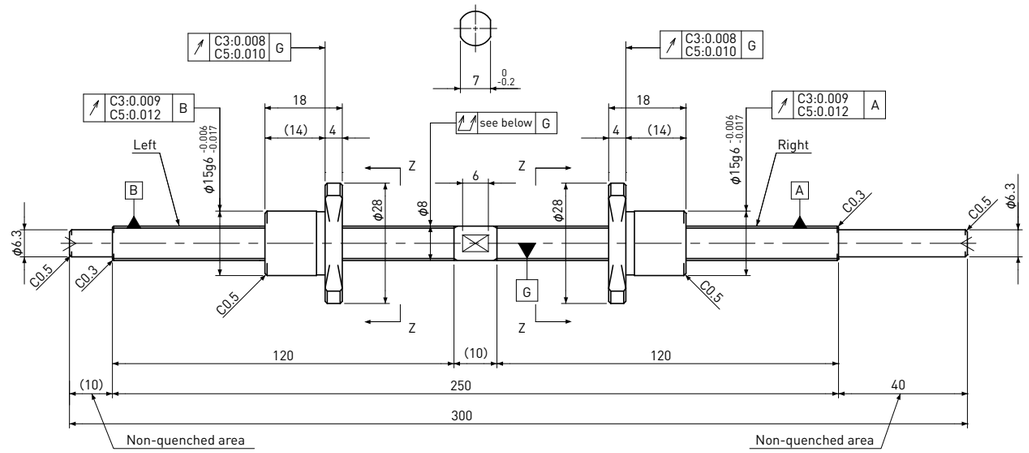

Unit:mm

Ball Screw Specifications	
Ball size	ϕ1.2
Number of thread	1
Thread direction	Left&Right
Shaft root dia.	ϕ7.0
Number of circuit	1×3
Shaft,Nut material	SCM415H
Surface hardness	HRC58～62 (Thread area)
Anti-rust treatment	Anti-rust oil

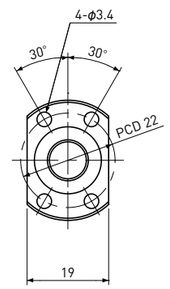

View Z–Z

Unit:mm

Ball Screw Model	Travel	Grade	Lead accuracy		Total Run-out	Axial play	Preload Torque Nm	Basic Load Rating N	
			Travel deviation e_p	Variation V_u				Dynamic Ca	Static Coa
SD0802-120L120R300C3	100	C3	±0.010	0.008	0.050	0	～0.020	1300	2300
SD0802-120L120R300C5	100	C5	±0.020	0.018	0.065	～0.005	—		

Note 1) Please designate end-journal profile with your sketch.
Note 2) Absolute position of both Nuts related to the Screw Shaft is not under the control.

Standard products in stock SD series

SD1002 | Shaft dia. φ10 Lead 2mm | C3&C5

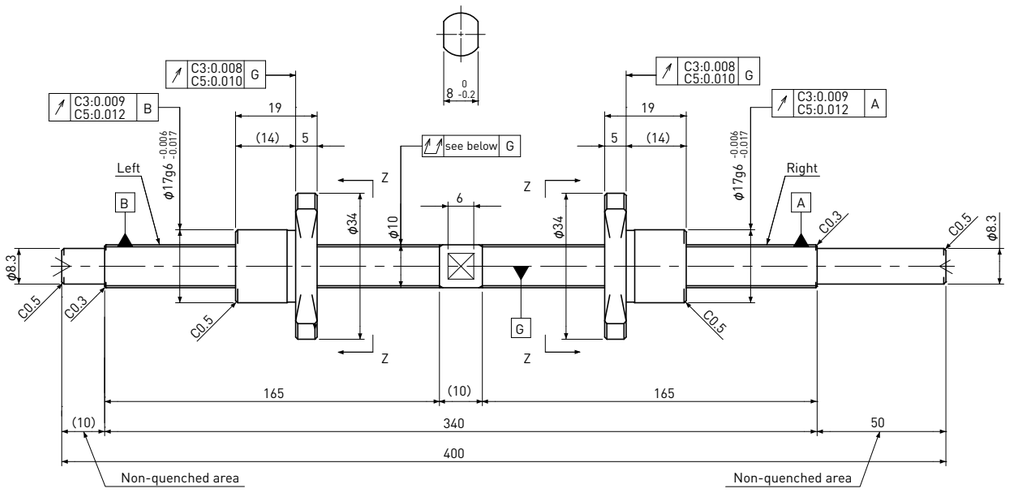

Unit:mm

Ball Screw Specifications	
Ball size	φ1.2
Number of thread	1
Thread direction	Left&Right
Shaft root dia.	φ9.0
Number of circuit	1×3
Shaft,Nut material	SCM415H
Surface hardness	HRC58～62 (Thread area)
Anti-rust treatment	Anti-rust oil

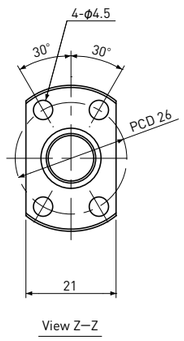

Unit:mm

Ball Screw Model	Travel	Grade	Lead accuracy		Total Run-out	Axial play	Preload Torque Nm	Basic Load Rating N	
			Travel deviation e_p	Variation V_u				Dynamic Ca	Static Coa
SD1002-165L165R400C3	145	C3	±0.010	0.008	0.050	0	～0.025	1450	3000
SD1002-165L165R400C5	145	C5	±0.020	0.018	0.065	～0.005	—		

Note 1) Please designate end-journal profile with your sketch.
Note 2) Absolute position of both Nuts related to the Screw Shaft is not under the control.

Standard products in stock SD series

SD1202 | Shaft dia. φ12 Lead 2mm | C3&C5

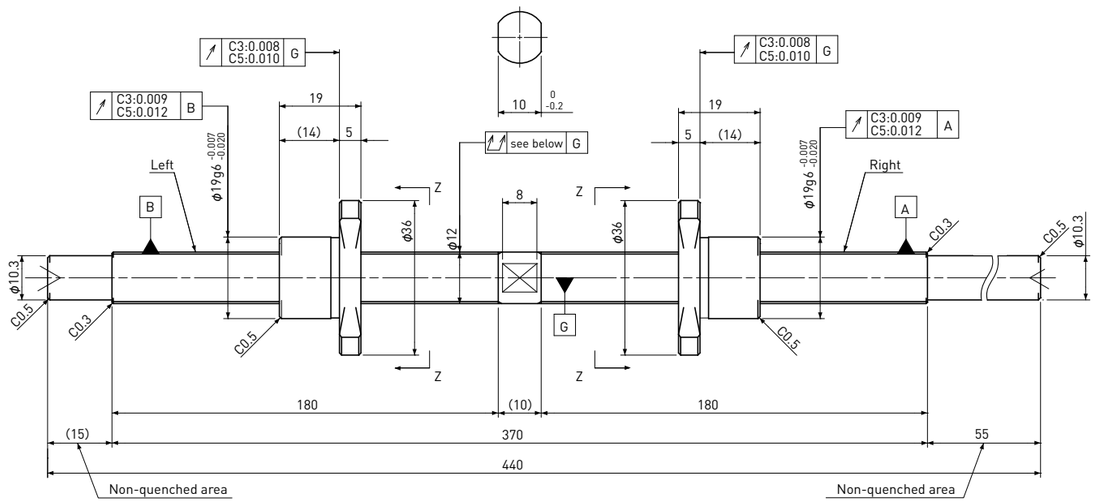

Unit:mm

Ball Screw Specifications	
Ball size	φ1.2
Number of thread	1
Thread direction	Left&Right
Shaft root dia.	φ11.0
Number of circuit	1×3
Shaft,Nut material	SCM415H
Surface hardness	HRC58～62 (Thread area)
Anti-rust treatment	Anti-rust oil

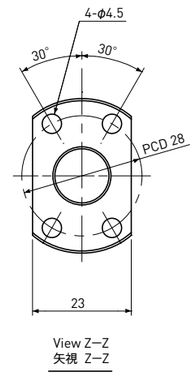

Unit:mm

Ball Screw Model	Travel	Grade	Lead accuracy		Total Run-out	Axial play	Preload Torque Nm	Basic Load Rating N	
			Travel deviation e_p	Variation V_u				Dynamic Ca	Static Coa
SD1202-180L180R440C3	160	C3	±0.010	0.008	0.065	0	～0.035	1600	3700
SD1202-180L180R440C5	160	C5	±0.020	0.018	0.080	～0.005	—		

Note 1) Please designate end-journal profile with your sketch.
Note 2) Absolute position of both Nuts related to the Screw Shaft is not under the control.

SR/SSR series Standardized Rolled Ball Screws

Rolled Ball Screws with accuracy Ct7 and Ct10 are available in stock. It is suitable for low cost design.
Rolled Ball Screws with end-journal machining are available for short delivery.
Stainless Rolled Ball Screws are also available.

●Combination of Shaft nominal dia. & Lead

Unit：mm

Shaft dia. \ Lead	1	2	2.5	4	5	6	8	10	12	15	20
4	A247 A248	A249									
5				A250							
6	A251 A252 A281	A253				A254		A255			
8	A256 A257 A282	A258 A259 A283	A260		A261		A262	A263	A264		
10		A265 A266 A284		A267	A268			A269		A270	A271
12		A272 A273						A274			
14		A275		A276							
15					A277			A278			A279

Note 1)The models marked red are available for Stainless Rolled Ball Screws.
Note 2)The numbers in a table：showing a page in this catalogue.

●Model number notation

SR 06 01 K — 200 R 200 C7
① ② ③ ④ ⑤ ⑥ ⑦ ⑧

①Rolled Ball Screws Series No.
SR：Rolled Ball Screws
SSR：Stainless Rolled Ball Screws
②Screw Shaft nominal diameter(mm)
③Lead(mm)
④Ball Nut type
None：Standard
K：Compact type
⑤Screw thread length(mm)
⑥Thread direction(R=Right-hand)
⑦Screw Shaft total length(mm)
⑧Accuracy grade(C7 or C10)

●Accuracy Grade & Axial play

Accuracy grade of SR series (Standardized Rolled Ball Screws) and SSR series (Standardized Stainless Rolled Ball Screws) are based on Ct7 and Ct10(JIS B 1192-3). According to accuracy grade, Axial play 0.020mm or less (Ct7) and 0.050mm or less (Ct10) are in stock.

●Material & Surface hardness

Materials and Surface hardness of SR series (Standardized Rolled Ball Screws) and SSR series (Standardized Stainless Rolled Ball Screws) are as follows.

Products	Material	Heat treatment	Surface hardness
Rolled Ball Screws (SR series)	Shaft： SCM415 S55C SUJ2	Carburizing Induction Hardening Quench & Temper	HRC58 or more
	Nut：SCM415	Carburizing and Quenching	
Stainless Rolled Ball Screws (SSR series)	Shaft：SUS440C	Induction hardening	HRC55 or more
	Nut：SUS440C	Vacuum hardening	

●Lubrication

SR series (Standardized Rolled Ball Screws) and SSR series (Standardized Stainless Rolled Ball Screws) without end-journal machining are applied with anti-rust oil for rust prevention.
Anti-rust oil does not have lubricating function so that please apply the Grease or lubrication oil when using the Ball Screws.
If there is no specific instruction, KSS would recommend our original Grease (MSG No.2) as standard lubricant.
Please feel free to contact us.

●Precision Rolled Ball Screws

High accuracy(JIS C5) can be produced by Rolled process, what we call Precision Rolled Ball Screws(PSR/PSRT series). Please see page A319.

●Others

End-journal configuration of SR series (Standardized Rolled Ball Screws) and SSR series (Standardized stainless Rolled Ball Screws) are not standardized. When you request additional machining, please send us a drawing with end-journal profile.
Rolled Ball Screws with Integrated end-journal, which is bigger Bearing face than supported seat, are available (SRT/SSRT series) as shown below.
Please refer to page A285 or ask KSS.

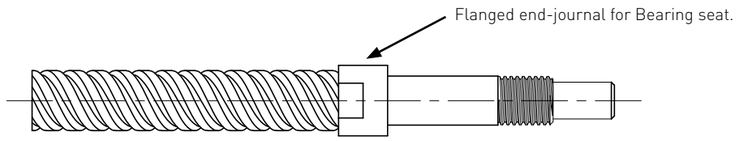

Standard products in stock SR series

SR0401 | Shaft dia. ϕ4 Lead 1mm | Ct7&Ct10

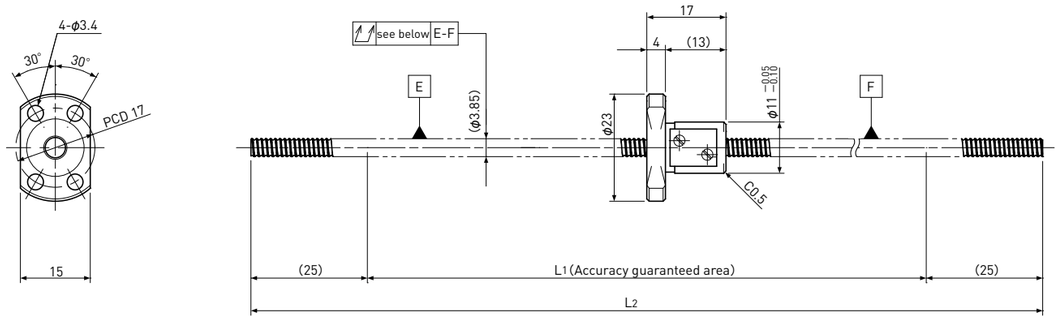

Unit : mm

Ball Screw Specifications	
Ball size	ϕ0.8
Number of thread	1
Thread direction	Right
Shaft root dia.	ϕ3.3
Number of circuit	3.7×1
Shaft, Nut material	SCM415H
Surface hardness	HRC58～62 (Thread area)
Anti-rust treatment	Anti-rust oil

Unit : mm

Ball Screw Model	Travel	Grade	Shaft length		Lead accuracy		Total Run-out	Axial play	Preload Torque Nm	Basic Load Rating N	
			L_1	L_2	Travel deviation e_p	Variation V_{300}				Dynamic Ca	Static Coa
SR0401-250R250C7	180	Ct7	200	250	±0.03	—	0.200	～0.020	—	560	790
SR0401-250R250C10	180	Ct10	200	250	±0.14	—	0.400	～0.050			

Note) Please designate end-journal profile with your sketch.

Standard products in stock SR series

SR0401K | Compact Nut Shaft dia. ϕ4 Lead 1mm | Ct7&Ct10

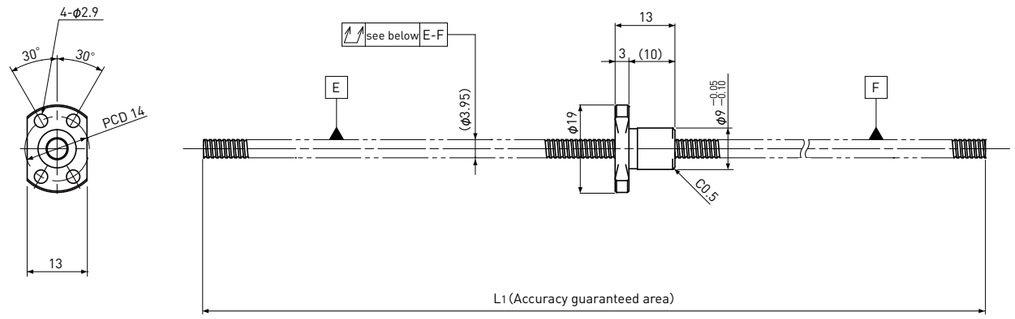

Unit : mm

Ball Screw Specifications		
Ball size		ϕ0.6
Number of thread		1
Thread direction		Right
Shaft root dia.		ϕ3.4
Number of circuit		1×3
Material	Shaft	S55C
	Nut	SCM415H
Surface hardness		HRC58～ (Thread area)
Anti-rust treatment		Anti-rust oil

Unit : mm

Ball Screw Model	Travel	Grade	Shaft length		Lead accuracy		Total Run-out	Axial play	Preload Torque Nm	Basic Load Rating N	
			L_1	L_2	Travel deviation e_p	Variation V_{300}				Dynamic Ca	Static Coa
SR0401K-100R100C7	80	Ct7	100	—	±0.02	—	0.080	～0.020	—	300	430
SR0401K-100R100C10	80	Ct10	100	—	±0.07	—	0.160	～0.050			

Note) Please designate end-journal profile with your sketch.

Standard products in stock SR series

SR0402 | Shaft dia. ϕ4 Lead 2mm | Ct7&Ct10

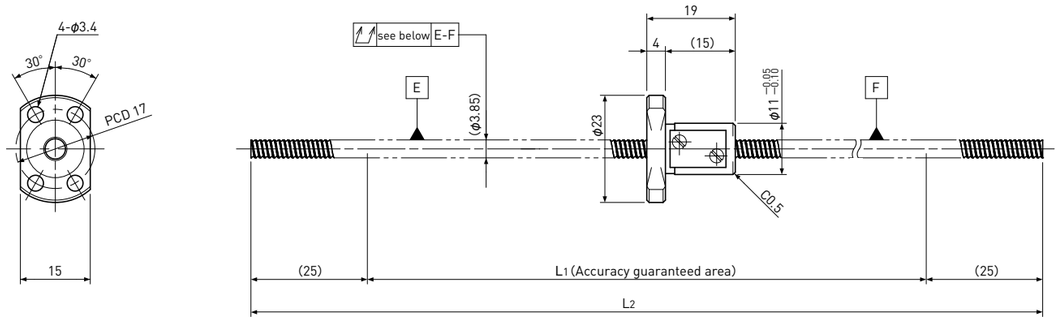

Unit : mm

Ball Screw Specifications	
Ball size	ϕ0.8
Number of thread	1
Thread direction	Right
Shaft root dia.	ϕ3.3
Number of circuit	2.7×1
Shaft, Nut material	SCM415H
Surface hardness	HRC58~62 (Thread area)
Anti-rust treatment	Anti-rust oil

Unit : mm

Ball Screw Model	Travel	Grade	Shaft length		Lead accuracy		Total Run-out	Axial play	Preload Torque Nm	Basic Load Rating N	
			L_1	L_2	Travel deviation e_p	Variation V_{300}				Dynamic Ca	Static Coa
SR0402-250R250C7	180	Ct7	200	250	±0.03	—	0.200	~0.020	—	420	570
SR0402-250R250C10	180	Ct10	200	250	±0.14	—	0.400	~0.050			

Note) Please designate end-journal profile with your sketch.

Standard products in stock SR series

SR0504 | Shaft dia. ϕ5 Lead 4mm | Ct7&Ct10

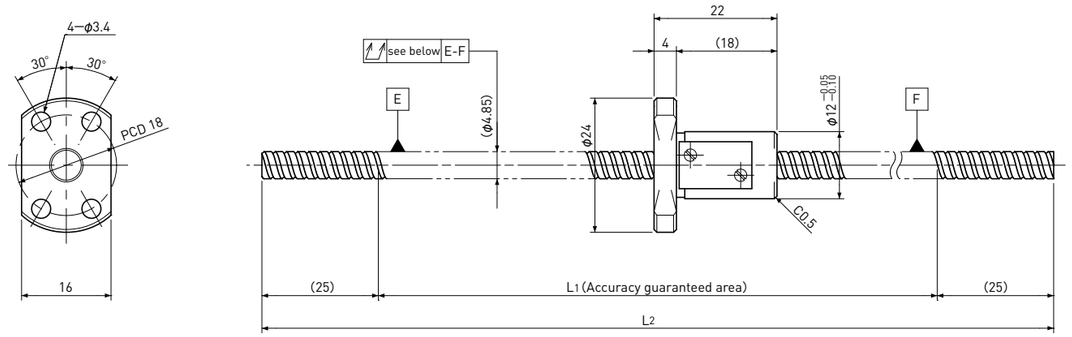

Unit : mm

Ball Screw Specifications	
Ball size	ϕ0.8
Number of thread	1
Thread direction	Right
Shaft root dia.	ϕ4.3
Number of circuit	2.7×1
Shaft, Nut material	SCM415H
Surface hardness	HRC58~62 (Thread area)
Anti-rust treatment	Anti-rust oil

Unit : mm

Ball Screw Model	Travel	Grade	Shaft length		Lead accuracy		Total Run-out	Axial play	Preload Torque Nm	Basic Load Rating N	
			L_1	L_2	Travel deviation e_p	Variation V_{300}				Dynamic Ca	Static Coa
SR0504-250R250C7	175	Ct7	200	250	±0.03	—	0.120	~0.020	—	470	720
SR0504-250R250C10	175	Ct10	200	250	±0.14	—	0.240	~0.050			

Note) Please designate end-journal profile with your sketch.

Standard products in stock SR series

SR0601 | Shaft dia. φ6 Lead 1mm | Ct7&Ct10

＊Please refer to page A281 for stainless steel type.

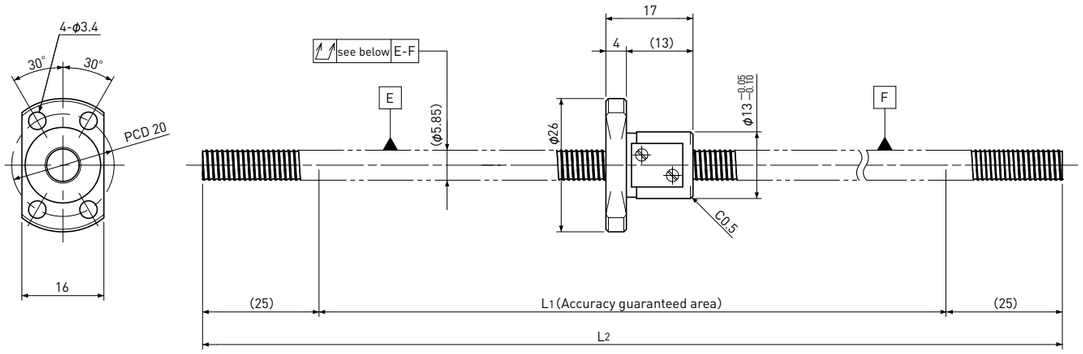

Unit：mm

Ball Screw Specifications	
Ball size	φ0.8
Number of thread	1
Thread direction	Right
Shaft root dia.	φ5.3
Number of circuit	3.7×1
Shaft, Nut material	SCM415H
Surface hardness	HRC58～62 (Thread area)
Anti-rust treatment	Anti-rust oil

Unit：mm

Ball Screw Model	Travel	Grade	Shaft length		Lead accuracy		Total Run-out	Axial play	Preload Torque Nm	Basic Load Rating N	
			L_1	L_2	Travel deviation e_p	Variation V_{300}				Dynamic Ca	Static Coa
SR0601-300R300C7	230	Ct7	250	300	±0.04	—	0.120	～0.020	—	680	1200
SR0601-300R300C10	230	Ct10	250	300	±0.17	—	0.240	～0.050			

Note) Please designate end-journal profile with your sketch.

Standard products in stock SR series

SR0601K | Compact Nut Shaft dia. φ6 Lead 1mm | Ct7&Ct10

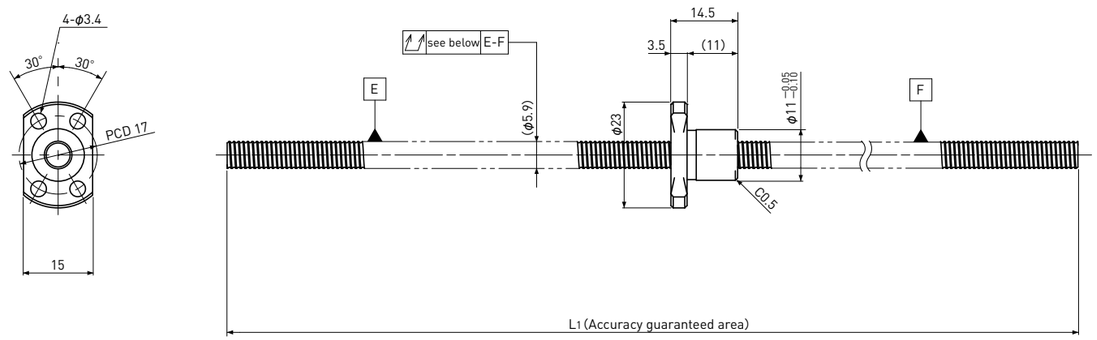

Unit：mm

Ball Screw Specifications		
Ball size		φ0.8
Number of thread		1
Thread direction		Right
Shaft root dia.		φ5.3
Number of circuit		1×3
material	Shaft	S55C
	Nut	SCM415H
Surface hardness		HRC58～ (Thread area)
Anti-rust treatment		Anti-rust oil

Unit：mm

Ball Screw Model	Travel	Grade	Shaft length		Lead accuracy		Total Run-out	Axial play	Preload Torque Nm	Basic Load Rating N	
			L_1	L_2	Travel deviation e_p	Variation V_{300}				Dynamic Ca	Static Coa
SR0601K-200R200C7	175	Ct7	200	—	±0.03	—	0.080	～0.020	—	560	950
SR0601K-200R200C10	175	Ct10	200	—	±0.14	—	0.160	～0.050			

Note) Please designate end-journal profile with your sketch.

Standard products in stock SR series

SR0602 | Shaft dia. φ6 Lead 2mm | Ct7&Ct10

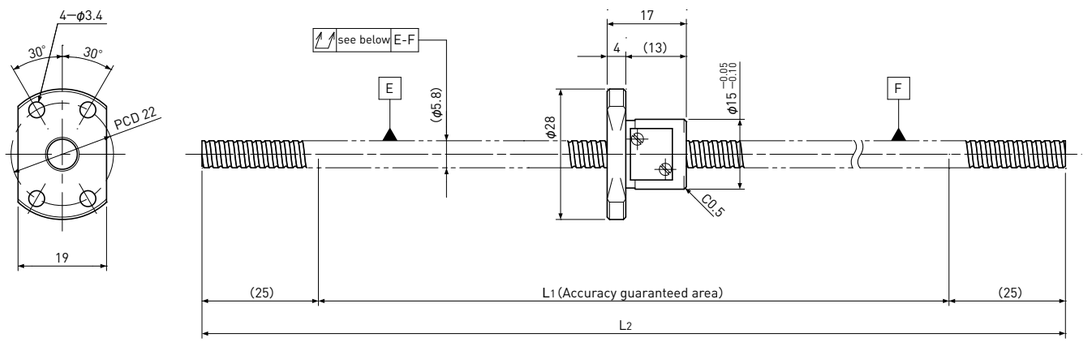

Unit : mm

Ball Screw Specifications	
Ball size	φ1.0
Number of thread	1
Thread direction	Right
Shaft root dia.	φ5.1
Number of circuit	2.7×1
Shaft, Nut material	SCM415H
Surface hardness	HRC58～62 (Thread area)
Anti-rust treatment	Anti-rust oil

Unit : mm

Ball Screw Model	Travel	Grade	Shaft length		Lead accuracy		Total Run-out	Axial play	Preload Torque Nm	Basic Load Rating N	
			L_1	L_2	Travel deviation e_p	Variation V_{300}				Dynamic Ca	Static Coa
SR0602-300R300C7	230	Ct7	250	300	±0.04	—	0.120	～0.020	—	750	1200
SR0602-300R300C10	230	Ct10	250	300	±0.17	—	0.240	～0.050			

Note) Please designate end-journal profile with your sketch.

Standard products in stock SR series

SR0606 | Shaft dia. φ6 Lead 6mm | Ct7&Ct10

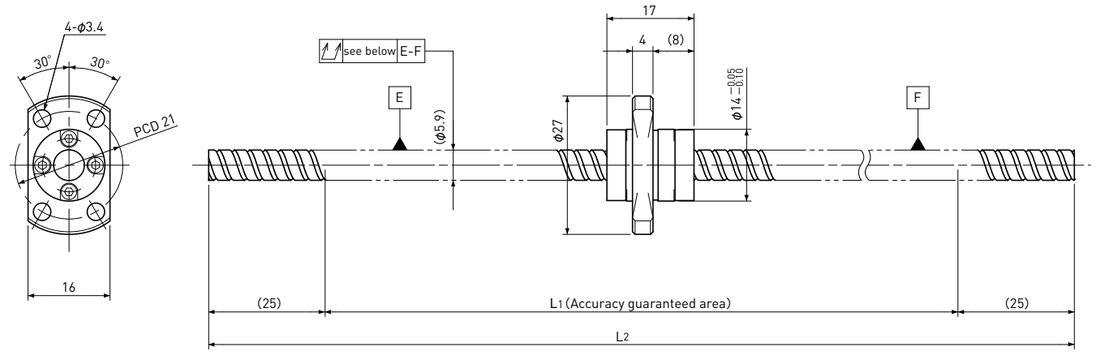

Unit : mm

Ball Screw Specifications	
Ball size	φ1.0
Number of thread	2
Thread direction	Right
Shaft root dia.	φ5.2
Number of circuit	1.6×2
Shaft, Nut material	SCM415H
Surface hardness	HRC58～62 (Thread area)
Anti-rust treatment	Anti-rust oil

Unit : mm

Ball Screw Model	Travel	Grade	Shaft length		Lead accuracy		Total Run-out	Axial play	Preload Torque Nm	Basic Load Rating N	
			L_1	L_2	Travel deviation e_p	Variation V_{300}				Dynamic Ca	Static Coa
SR0606-300R300C7	230	Ct7	250	300	±0.04	—	0.120	～0.020	—	870	1450
SR0606-300R300C10	230	Ct10	250	300	±0.17	—	0.240	～0.050			

Note) Please designate end-journal profile with your sketch.

Standard products in stock SR series

SR0610 | Shaft dia. φ6 Lead 10mm | Ct7&Ct10

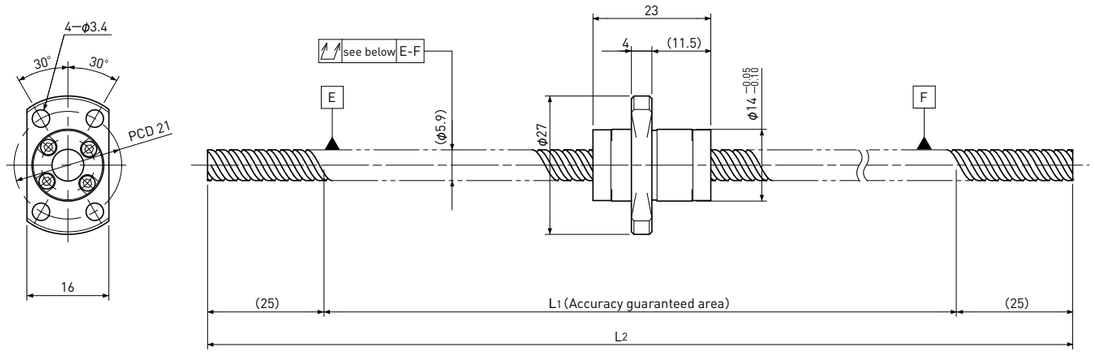

Unit : mm

Ball Screw Specifications	
Ball size	φ1.2
Number of thread	2
Thread direction	Right
Shaft root dia.	φ5.0
Number of circuit	1.2×2
Shaft, Nut material	SCM415H
Surface hardness	HRC58～62 (Thread area)
Anti-rust treatment	Anti-rust oil

Unit : mm

Ball Screw Model	Travel	Grade	Shaft length		Lead accuracy		Total Run-out	Axial play	Preload Torque Nm	Basic Load Rating N	
			L_1	L_2	Travel deviation e_p	Variation V_{300}				Dynamic Ca	Static Coa
SR0610-300R300C7	225	Ct7	250	300	±0.04	—	0.120	～0.020	—	950	1600
SR0610-300R300C10	225	Ct10	250	300	±0.17	—	0.240	～0.050			

Note) Please designate end-journal profile with your sketch.

Standard products in stock SR series

SR0801 | Shaft dia. φ8 Lead 1mm | Ct7&Ct10

＊Please refer to page A282 for stainless steel type.

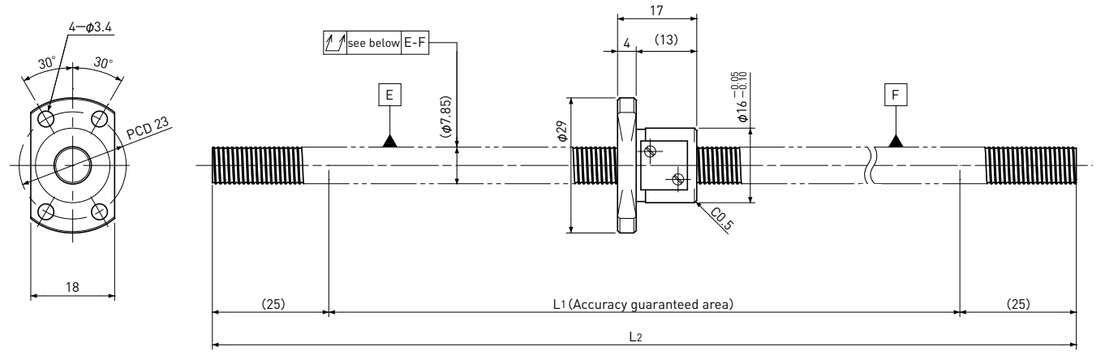

Unit : mm

Ball Screw Specifications	
Ball size	φ0.8
Number of thread	1
Thread direction	Right
Shaft root dia.	φ7.3
Number of circuit	3.7×1
Shaft, Nut material	SCM415H
Surface hardness	HRC58～62 (Thread area)
Anti-rust treatment	Anti-rust oil

Unit : mm

Ball Screw Model	Travel	Grade	Shaft length		Lead accuracy		Total Run-out	Axial play	Preload Torque Nm	Basic Load Rating N	
			L_1	L_2	Travel deviation e_p	Variation V_{300}				Dynamic Ca	Static Coa
SR0801-400R400C7	330	Ct7	350	400	±0.06	0.05	0.120	～0.020	—	780	1650
SR0801-400R400C10	330	Ct10	350	400	±0.24	0.21	0.240	～0.050			

Note) Please designate end-journal profile with your sketch.

Standard products in stock SR series

SR0801K | Compact Nut Shaft dia. φ8 Lead 1mm | Ct7&Ct10

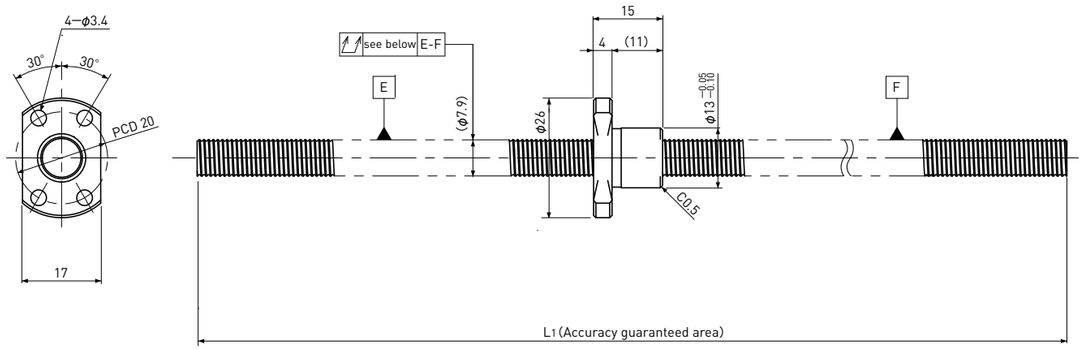

Unit : mm

Ball Screw Specifications		
Ball size		φ0.8
Number of thread		1
Thread direction		Right
Shaft root dia.		φ7.3
Number of circuit		1×3
material	Shaft	S55C
	Nut	SCM415H
Surface hardness		HRC58～ (Thread area)
Anti-rust treatment		Anti-rust oil

Unit : mm

Ball Screw Model	Travel	Grade	Shaft length		Lead accuracy		Total Run-out	Axial play	Preload Torque Nm	Basic Load Rating N	
			L_1	L_2	Travel deviation e_p	Variation V_{300}				Dynamic Ca	Static Coa
SR0801K-230R230C7	200	Ct7	230	—	±0.03	—	0.080	～0.020	—	650	1300
SR0801K-230R230C10	200	Ct10	230	—	±0.16	—	0.160	～0.050			

Note) Please designate end-journal profile with your sketch.

Standard products in stock SR series

SR0802 | Shaft dia. φ8 Lead 2mm | Ct7&Ct10

＊Please refer to page A283 for stainless steel type.

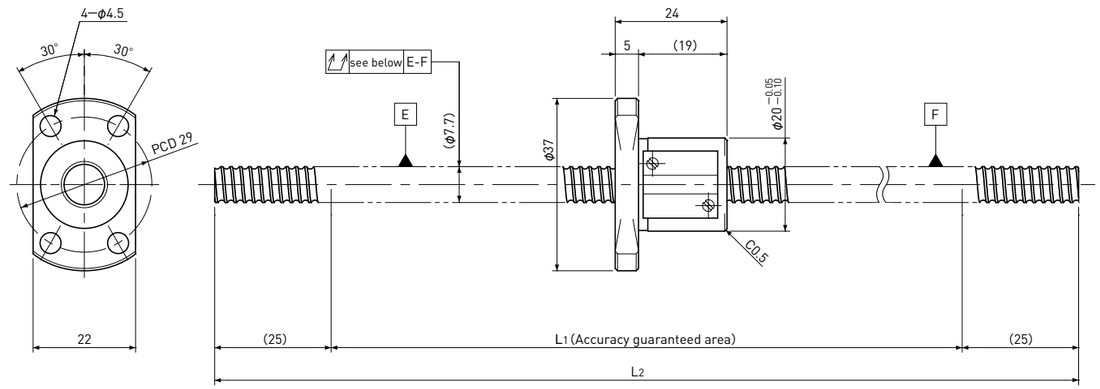

Unit : mm

Ball Screw Specifications	
Ball size	φ1.5875
Number of thread	1
Thread direction	Right
Shaft root dia.	φ6.6
Number of circuit	3.7×1
Shaft, Nut material	SCM415H
Surface hardness	HRC58～62 (Thread area)
Anti-rust treatment	Anti-rust oil

Unit : mm

Ball Screw Model	Travel	Grade	Shaft length		Lead accuracy		Total Run-out	Axial play	Preload Torque Nm	Basic Load Rating N	
			L_1	L_2	Travel deviation e_p	Variation V_{300}				Dynamic Ca	Static Coa
SR0802-400R400C7	325	Ct7	350	400	±0.06	0.05	0.120	～0.020	—	2400	4100
SR0802-400R400C10	325	Ct10	350	400	±0.24	0.21	0.240	～0.050			

Note) Please designate end-journal profile with your sketch.

Standard products in stock SR series

SR0802K | Compact Nut Shaft dia. φ8 Lead 2mm | Ct7&Ct10

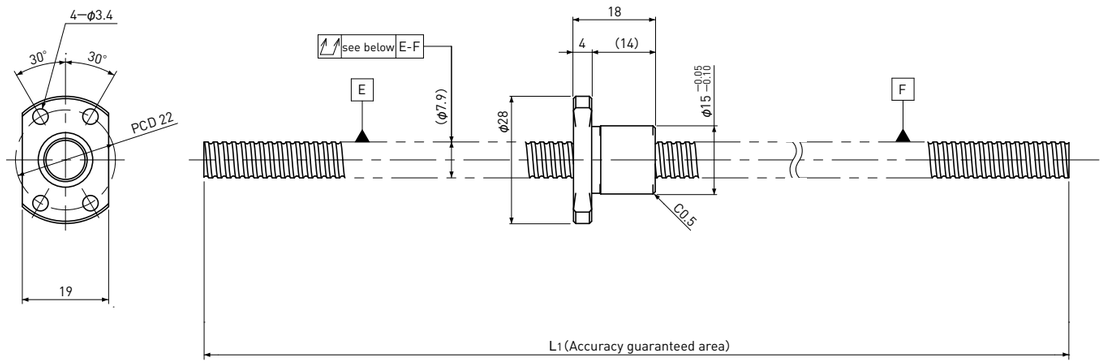

Unit : mm

Ball Screw Specifications		
Ball size		φ1.2
Number of thread		1
Thread direction		Right
Shaft root dia.		φ7.0
Number of circuit		1×3
Material	Shaft	S55C
	Nut	SCM415H
Surface hardness		HRC58～ (Thread area)
Anti-rust treatment		Anti-rust oil

Unit : mm

Ball Screw Model	Travel	Grade	Shaft length		Lead accuracy		Total Run-out	Axial play	Preload Torque Nm	Basic Load Rating N	
			L_1	L_2	Travel deviation e_p	Variation V_{300}				Dynamic Ca	Static Coa
SR0802K-230R230C7	200	Ct7	230	—	±0.03	—	0.080	～0.020	—	1300	2300
SR0802K-230R230C10	200	Ct10	230	—	±0.16	—	0.160	～0.050			

Note) Please designate end-journal profile with your sketch.

Standard products in stock SR series

SR0802.5 | Shaft dia. φ8 Lead 2.5mm | Ct7&Ct10

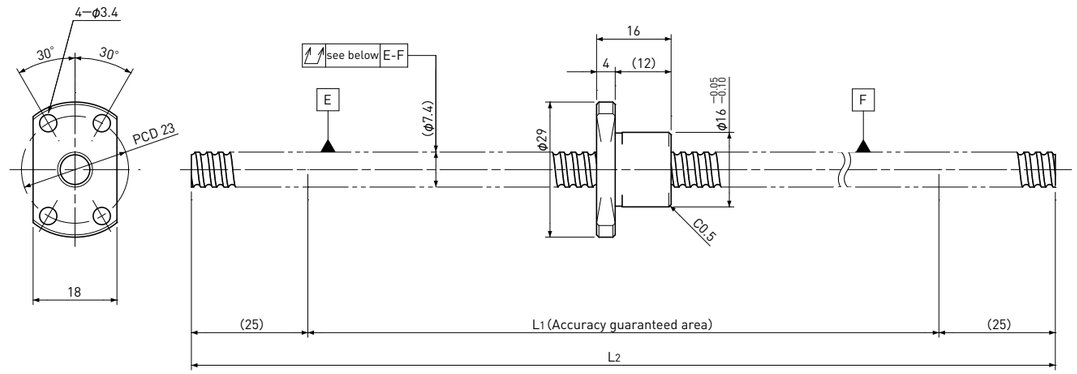

Unit : mm

Ball Screw Specifications	
Ball size	φ1.5875
Number of thread	1
Thread direction	Right
Shaft root dia.	φ6.3
Number of circuit	2.7×1
Shaft, Nut material	SCM415H
Surface hardness	HRC58～62 (Thread area)
Anti-rust treatment	Anti-rust oil

Unit : mm

Ball Screw Model	Travel	Grade	Shaft length		Lead accuracy		Total Run-out	Axial play	Preload Torque Nm	Basic Load Rating N	
			L_1	L_2	Travel deviation e_p	Variation V_{300}				Dynamic Ca	Static Coa
SR0802.5-400R400C7	330	Ct7	350	400	±0.06	0.05	0.120	～0.020	—	1850	3000
SR0802.5-400R400C10	330	Ct10	350	400	±0.24	0.21	0.240	～0.050			

Note) Please designate end-journal profile with your sketch.

Standard products in stock SR series

SR0805 | Shaft dia. φ8 Lead 5mm | Ct7&Ct10

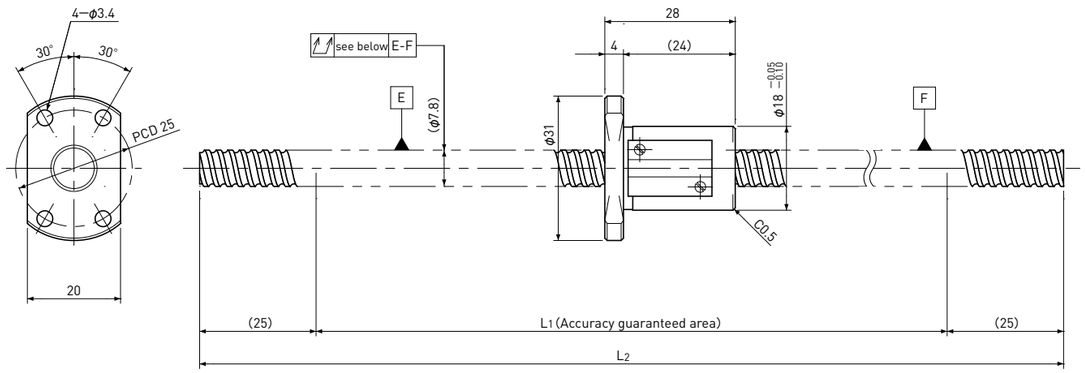

Unit : mm

Ball Screw Specifications	
Ball size	φ1.5875
Number of thread	1
Thread direction	Right
Shaft root dia.	φ6.6
Number of circuit	2.7×1
Shaft, Nut material	SCM415H
Surface hardness	HRC58～62 (Thread area)
Anti-rust treatment	Anti-rust oil

Unit : mm

Ball Screw Model	Travel	Grade	Shaft length		Lead accuracy		Total Run-out	Axial play	Preload Torque Nm	Basic Load Rating N	
			L_1	L_2	Travel deviation e_p	Variation V_{300}				Dynamic Ca	Static Coa
SR0805-400R400C7	320	Ct7	350	400	±0.06	0.05	0.120	～0.020	—	1850	3000
SR0805-400R400C10	320	Ct10	350	400	±0.24	0.21	0.240	～0.050			

Note) Please designate end-journal profile with your sketch.

Standard products in stock SR series

SR0808 | Shaft dia. φ8 Lead 8mm | Ct7&Ct10

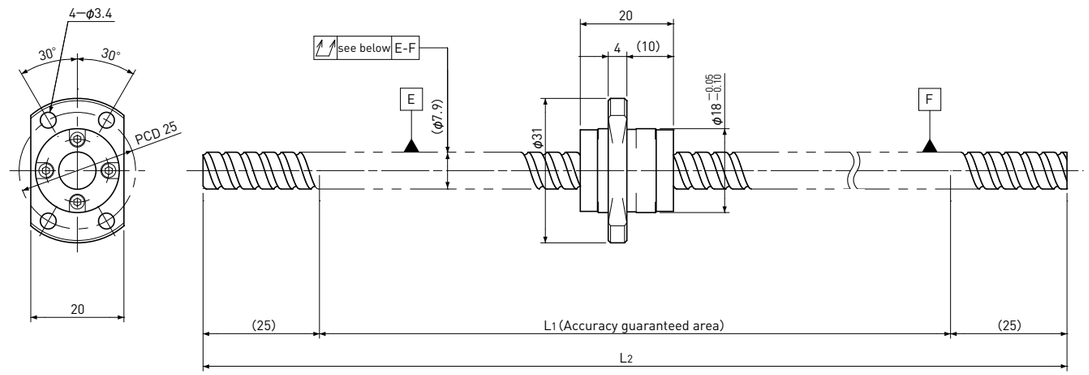

Unit : mm

Ball Screw Specifications	
Ball size	φ1.5875
Number of thread	2
Thread direction	Right
Shaft root dia.	φ6.7
Number of circuit	1.6×2
Shaft, Nut material	SCM415H
Surface hardness	HRC58～62 (Thread area)
Anti-rust treatment	Anti-rust oil

Unit : mm

Ball Screw Model	Travel	Grade	Shaft length		Lead accuracy		Total Run-out	Axial play	Preload Torque Nm	Basic Load Rating N	
			L_1	L_2	Travel deviation e_p	Variation V_{300}				Dynamic Ca	Static Coa
SR0808-400R400C7	330	Ct7	350	400	±0.06	0.05	0.120	～0.020	—	2200	3800
SR0808-400R400C10	330	Ct10	350	400	±0.24	0.21	0.240	～0.050			

Note) Please designate end-journal profile with your sketch.

Standard products in stock SR series

SR0810 | Shaft dia. φ8 Lead 10mm | Ct7&Ct10

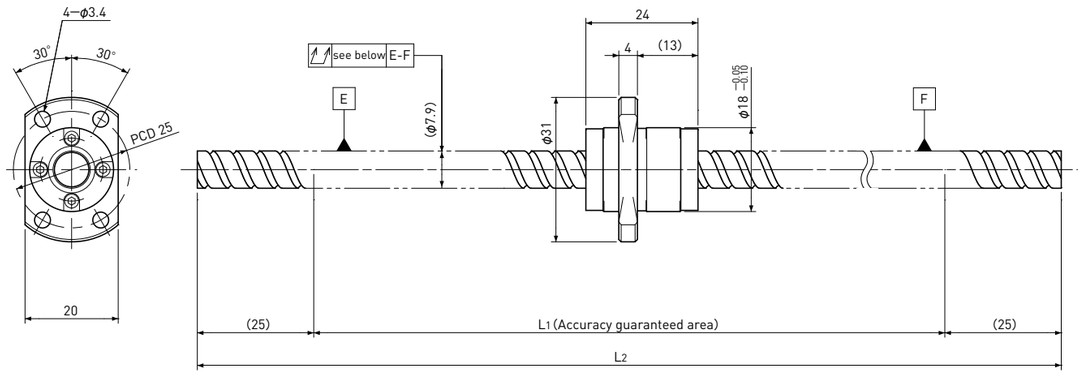

Unit : mm

Ball Screw Specifications	
Ball size	φ1.5875
Number of thread	2
Thread direction	Right
Shaft root dia.	φ6.7
Number of circuit	1.6×2
Shaft, Nut material	SCM415H
Surface hardness	HRC58～62 (Thread area)
Anti-rust treatment	Anti-rust oil

Unit : mm

Ball Screw Model	Travel	Grade	Shaft length		Lead accuracy		Total Run-out	Axial play	Preload Torque Nm	Basic Load Rating N	
			L_1	L_2	Travel deviation e_p	Variation V_{300}				Dynamic Ca	Static Coa
SR0810-400R400C7	325	Ct7	350	400	±0.06	0.05	0.120	～0.020	—	2200	3800
SR0810-400R400C10	325	Ct10	350	400	±0.24	0.21	0.240	～0.050			

Note) Please designate end-journal profile with your sketch.

Standard products in stock SR series

SR0812 | Shaft dia. φ8 Lead 12mm | Ct7&Ct10

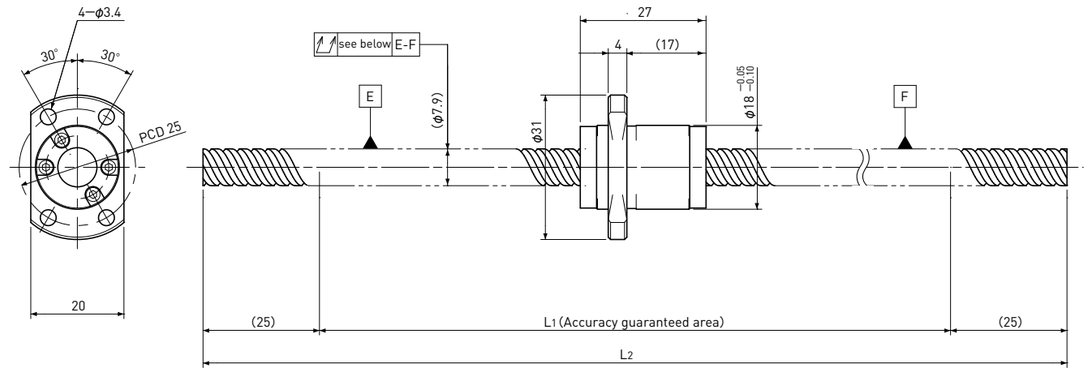

Unit : mm

Ball Screw Specifications	
Ball size	φ1.5875
Number of thread	2
Thread direction	Right
Shaft root dia.	φ6.7
Number of circuit	1.6×2
Shaft, Nut material	SCM415H
Surface hardness	HRC58～62 (Thread area)
Anti-rust treatment	Anti-rust oil

Unit : mm

Ball Screw Model	Travel	Grade	Shaft length		Lead accuracy		Total Run-out	Axial play	Preload Torque Nm	Basic Load Rating N	
			L_1	L_2	Travel deviation e_p	Variation V_{300}				Dynamic Ca	Static Coa
SR0812-400R400C7	320	Ct7	350	400	±0.06	0.05	0.120	～0.020	—	2200	4000
SR0812-400R400C10	320	Ct10	350	400	±0.24	0.21	0.240	～0.050			

Note) Please designate end-journal profile with your sketch.

Standard products in stock SR series

SR1002 | Shaft dia. φ10 Lead 2mm | Ct7&Ct10

＊Please refer to page A284 for stainless steel type.

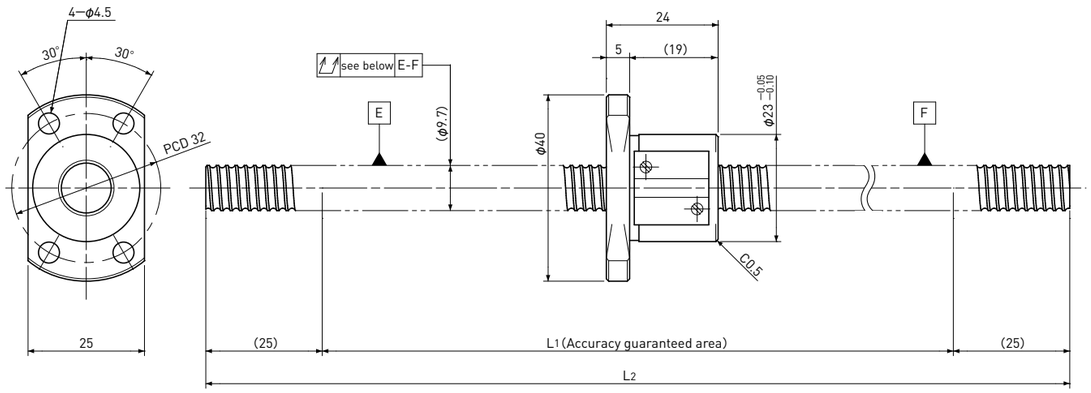

Unit : mm

Ball Screw Specifications	
Ball size	φ1.5875
Number of thread	1
Thread direction	Right
Shaft root dia.	φ8.6
Number of circuit	3.7×1
Shaft, Nut material	SCM415H
Surface hardness	HRC58～62 (Thread area)
Anti-rust treatment	Anti-rust oil

Unit : mm

Ball Screw Model	Travel	Grade	Shaft length		Lead accuracy		Total Run-out	Axial play	Preload Torque Nm	Basic Load Rating N	
			L_1	L_2	Travel deviation e_p	Variation V_{300}				Dynamic Ca	Static Coa
SR1002-400R400C7	325	Ct7	350	400	±0.05	0.05	0.080	～0.020	—	2700	5300
SR1002-400R400C10	325	Ct10	350	400	±0.24	0.21	0.160	～0.050			

Note) Please designate end-journal profile with your sketch.

Standard products in stock SR series

SR1002K | Compact Nut Shaft dia. φ10 Lead 2mm | Ct7&Ct10

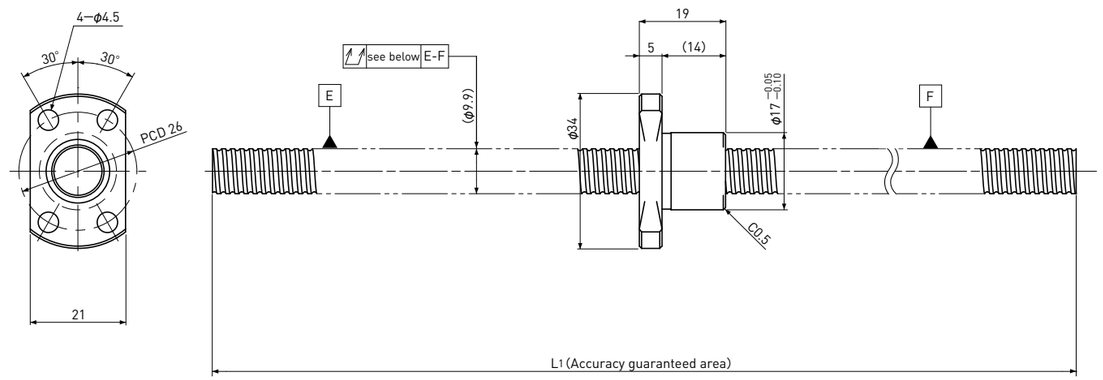

Unit : mm

Ball Screw Specifications		
Ball size		φ1.2
Number of thread		1
Thread direction		Right
Shaft root dia.		φ9.0
Number of circuit		1×3
Material	Shaft	S55C
	Nut	SCM415H
Surface hardness		HRC58～ (Thread area)
Anti-rust treatment		Anti-rust oil

Unit : mm

Ball Screw Model	Travel	Grade	Shaft length		Lead accuracy		Total Run-out	Axial play	Preload Torque Nm	Basic Load Rating N	
			L_1	L_2	Travel deviation e_p	Variation V_{300}				Dynamic Ca	Static Coa
SR1002K-230R230C7	200	Ct7	230	—	±0.03	—	0.080	～0.020	—	1450	3000
SR1002K-230R230C10	200	Ct10	230	—	±0.16	—	0.160	～0.050			

Note) Please designate end-journal profile with your sketch.

Standard products in stock SR series

SR1004 | Shaft dia. ϕ10 Lead 4mm | Ct7&Ct10

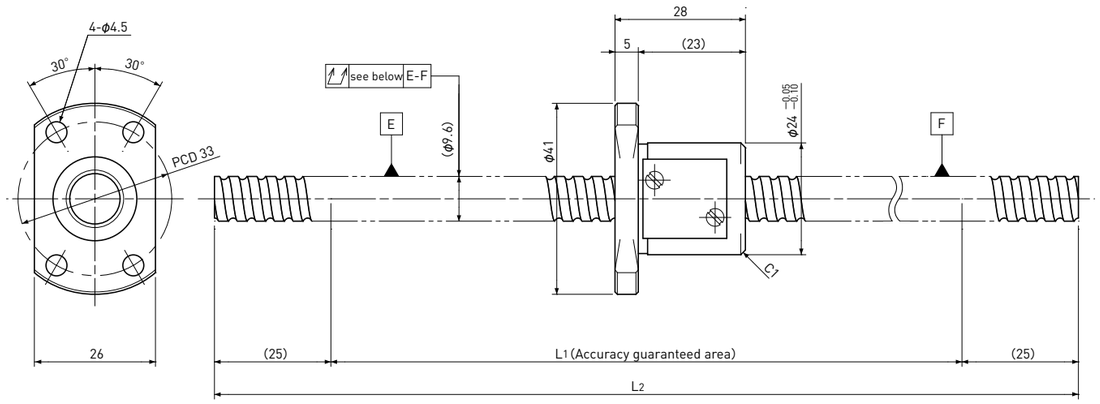

Unit : mm

Ball Screw Specifications	
Ball size	ϕ2.0
Number of thread	1
Thread direction	Right
Shaft root dia.	ϕ8.2
Number of circuit	2.7×1
Shaft, Nut material	SCM415H
Surface hardness	HRC58～62 (Thread area)
Anti-rust treatment	Anti-rust oil

Unit : mm

Ball Screw Model	Travel	Grade	Shaft length		Lead accuracy		Total Run-out	Axial play	Preload Torque Nm	Basic Load Rating N	
			L_1	L_2	Travel deviation e_p	Variation V_{300}				Dynamic Ca	Static Coa
SR1004-450R450C7	370	Ct7	400	450	±0.06	0.05	0.120	～0.020	—	3000	5200
SR1004-450R450C10	370	Ct10	400	450	±0.28	0.21	0.240	～0.050			

Note) Please designate end-journal profile with your sketch.

Standard products in stock SR series

SR1005 | Shaft dia. ϕ10 Lead 5mm | Ct7&Ct10

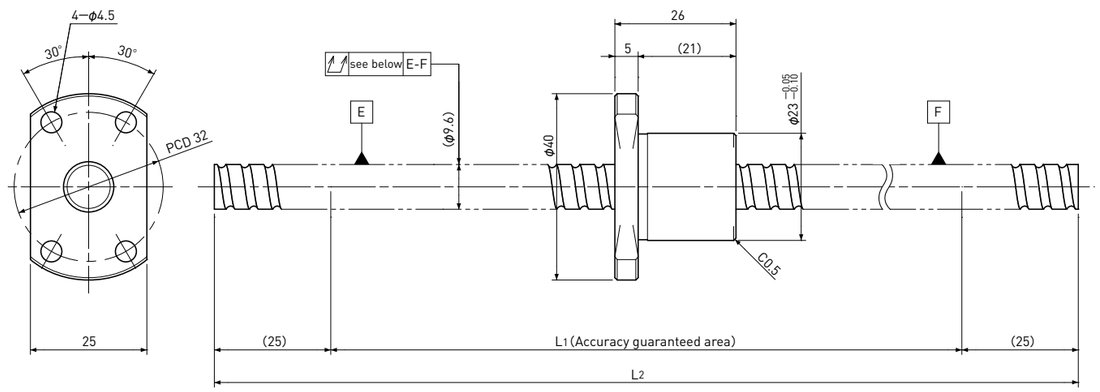

Unit : mm

Ball Screw Specifications	
Ball size	ϕ2.0
Number of thread	1
Thread direction	Right
Shaft root dia.	ϕ8.2
Number of circuit	2.7×1
Shaft, Nut material	SCM415H
Surface hardness	HRC58～62 (Thread area)
Anti-rust treatment	Anti-rust oil

Unit : mm

Ball Screw Model	Travel	Grade	Shaft length		Lead accuracy		Total Run-out	Axial play	Preload Torque Nm	Basic Load Rating N	
			L_1	L_2	Travel deviation e_p	Variation V_{300}				Dynamic Ca	Static Coa
SR1005-450R450C7	370	Ct7	400	450	±0.06	0.05	0.120	～0.020	—	3000	5200
SR1005-450R450C10	370	Ct10	400	450	±0.28	0.21	0.240	～0.050			

Note) Please designate end-journal profile with your sketch.

Standard products in stock SR series

SR1010 | Shaft dia. ϕ10 Lead 10mm | Ct7&Ct10

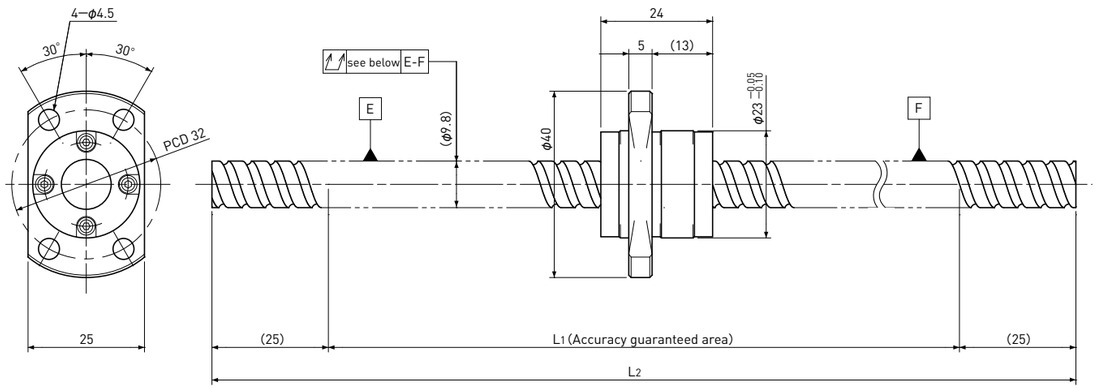

Unit : mm

Ball Screw Specifications	
Ball size	ϕ2.0
Number of thread	2
Thread direction	Right
Shaft root dia.	ϕ8.4
Number of circuit	1.6×2
Shaft, Nut material	SCM415H
Surface hardness	HRC58～62 (Thread area)
Anti-rust treatment	Anti-rust oil

Unit : mm

Ball Screw Model	Travel	Grade	Shaft length		Lead accuracy		Total Run-out	Axial play	Preload Torque Nm	Basic Load Rating N	
			L_1	L_2	Travel deviation e_p	Variation V_{300}				Dynamic Ca	Static Coa
SR1010-450R450C7	375	Ct7	400	450	±0.06	0.05	0.120	～0.020	—	3300	5900
SR1010-450R450C10	375	Ct10	400	450	±0.28	0.21	0.240	～0.050			

Note) Please designate end-journal profile with your sketch.

Standard products in stock SR series

SR1015 | Shaft dia. ϕ10 Lead 15mm | Ct7&Ct10

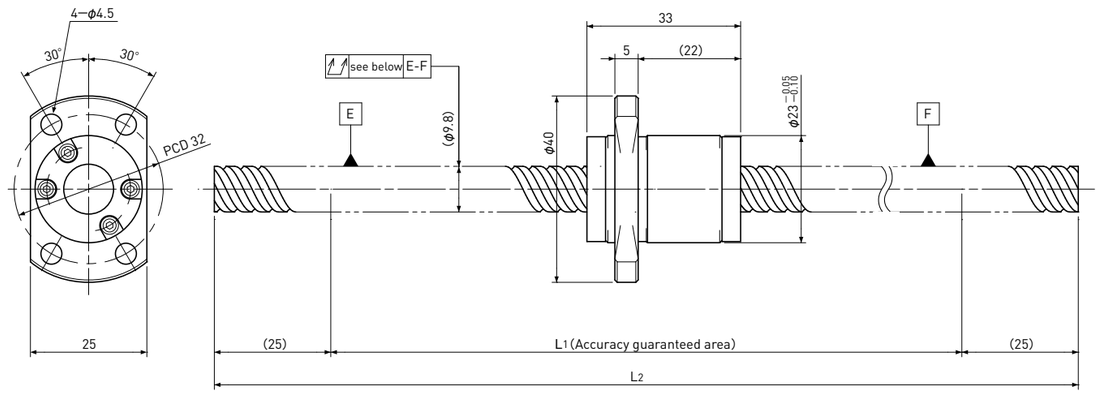

Unit : mm

Ball Screw Specifications	
Ball size	ϕ2.0
Number of thread	2
Thread direction	Right
Shaft root dia.	ϕ8.4
Number of circuit	1.6×2
Shaft, Nut material	SCM415H
Surface hardness	HRC58～62 (Thread area)
Anti-rust treatment	Anti-rust oil

Unit : mm

Ball Screw Model	Travel	Grade	Shaft length		Lead accuracy		Total Run-out	Axial play	Preload Torque Nm	Basic Load Rating N	
			L_1	L_2	Travel deviation e_p	Variation V_{300}				Dynamic Ca	Static Coa
SR1015-450R450C7	365	Ct7	400	450	±0.06	0.05	0.120	～0.020	—	3300	6400
SR1015-450R450C10	365	Ct10	400	450	±0.28	0.21	0.240	～0.050			

Note) Please designate end-journal profile with your sketch.

Standard products in stock SR series

SR1020 | Shaft dia. φ10 Lead 20mm | Ct7&Ct10

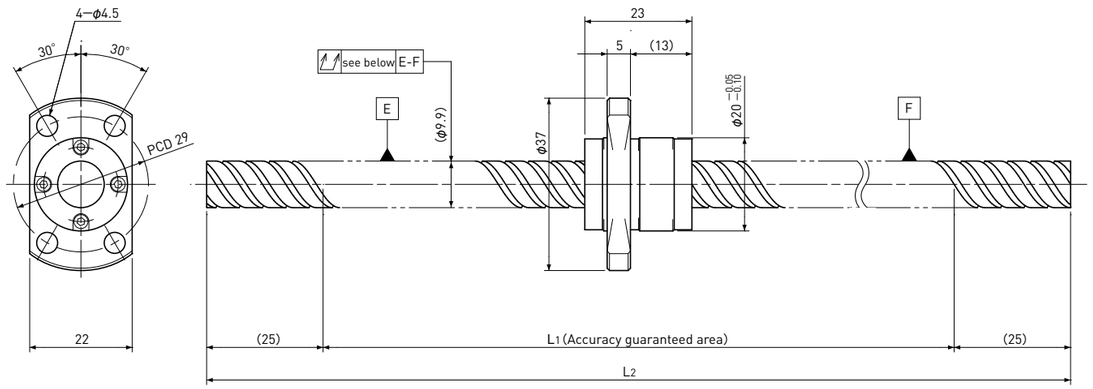

Unit：mm

Ball Screw Specifications	
Ball size	φ1.5875
Number of thread	4
Thread direction	Right
Shaft root dia.	φ8.7
Number of circuit	0.7×4
Shaft, Nut material	SCM415H
Surface hardness	HRC58～62 (Thread area)
Anti-rust treatment	Anti-rust oil

Unit：mm

Ball Screw Model	Travel	Grade	Shaft length		Lead accuracy		Total Run-out	Axial play	Preload Torque Nm	Basic Load Rating N	
			L_1	L_2	Travel deviation e_p	Variation V_{300}				Dynamic Ca	Static Coa
SR1020-450R450C7	375	Ct7	400	450	±0.06	0.05	0.120	～0.020	—	2100	4000
SR1020-450R450C10	375	Ct10	400	450	±0.28	0.21	0.240	～0.050			

Note) Please designate end-journal profile with your sketch.

Standard products in stock SR series

SR1202 | Shaft dia. φ12 Lead 2mm | Ct7&Ct10

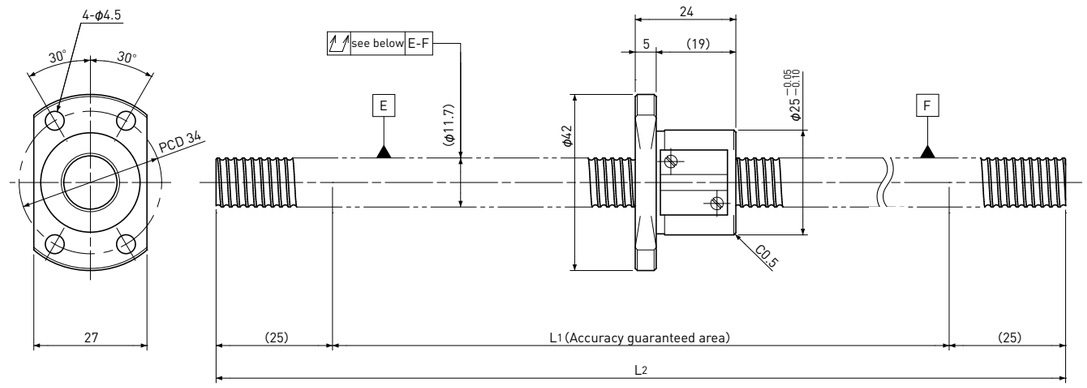

Unit：mm

Ball Screw Specifications	
Ball size	φ1.5875
Number of thread	1
Thread direction	Right
Shaft root dia.	φ10.6
Number of circuit	3.7×1
Shaft, Nut material	SCM415H
Surface hardness	HRC58～62 (Thread area)
Anti-rust treatment	Anti-rust oil

Unit：mm

Ball Screw Model	Travel	Grade	Shaft length		Lead accuracy		Total Run-out	Axial play	Preload Torque Nm	Basic Load Rating N	
			L_1	L_2	Travel deviation e_p	Variation V_{300}				Dynamic Ca	Static Coa
SR1202-450R450C7	375	Ct7	400	450	±0.06	0.05	0.080	～0.020	—	3000	6400
SR1202-450R450C10	375	Ct10	400	450	±0.28	0.21	0.160	～0.050			

Note) Please designate end-journal profile with your sketch.

Standard products in stock SR series

SR1202K | Compact Nut Shaft dia. φ12 Lead 2mm | Ct7&Ct10

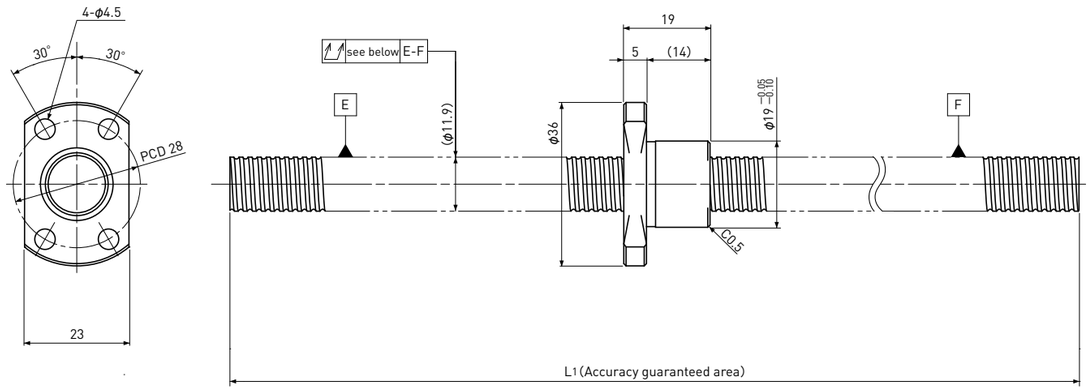

Unit : mm

Ball Screw Specifications		
Ball size		φ1.2
Number of thread		1
Thread direction		Right
Shaft root dia.		φ11.0
Number of circuit		1×3
material	Shaft	S55C
	Nut	SCM415H
Surface hardness		HRC58～ (Thread area)
Anti-rust treatment		Anti-rust oil

Unit : mm

Ball Screw Model	Travel	Grade	Shaft length		Lead accuracy		Total Run-out	Axial play	Preload Torque Nm	Basic Load Rating N	
			L_1	L_2	Travel deviation e_p	Variation V_{300}				Dynamic Ca	Static Coa
SR1202K-280R280C7	250	Ct7	280	—	±0.04	—	0.080	～0.020	—	1600	3700
SR1202K-280R280C10	250	Ct10	280	—	±0.19	—	0.160	～0.050			

Note) Please designate end-journal profile with your sketch.

Standard products in stock SR series

SR1210 | Shaft dia. φ12 Lead 10mm | Ct7&Ct10

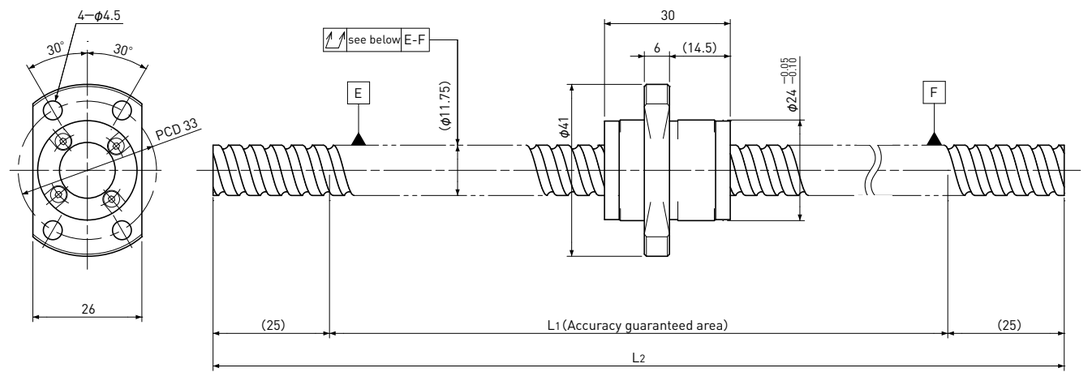

Unit : mm

Ball Screw Specifications	
Ball size	φ2.381
Number of thread	2
Thread direction	Right
Shaft root dia.	φ10.2
Number of circuit	1.7×2
Shaft, Nut material	SCM415H
Surface hardness	HRC58～62 (Thread area)
Anti-rust treatment	Anti-rust oil

Unit : mm

Ball Screw Model	Travel	Grade	Shaft length		Lead accuracy		Total Run-out	Axial play	Preload Torque Nm	Basic Load Rating N	
			L_1	L_2	Travel deviation e_p	Variation V_{300}				Dynamic Ca	Static Coa
SR1210-450R450C7	370	Ct7	400	450	±0.06	0.05	0.080	～0.020	—	5100	9800
SR1210-450R450C10	370	Ct10	400	450	±0.28	0.21	0.160	～0.050			

Note) Please designate end-journal profile with your sketch.

Standard products in stock SR series

SR1402 | Shaft dia. ϕ14 Lead 2mm | Ct7&Ct10

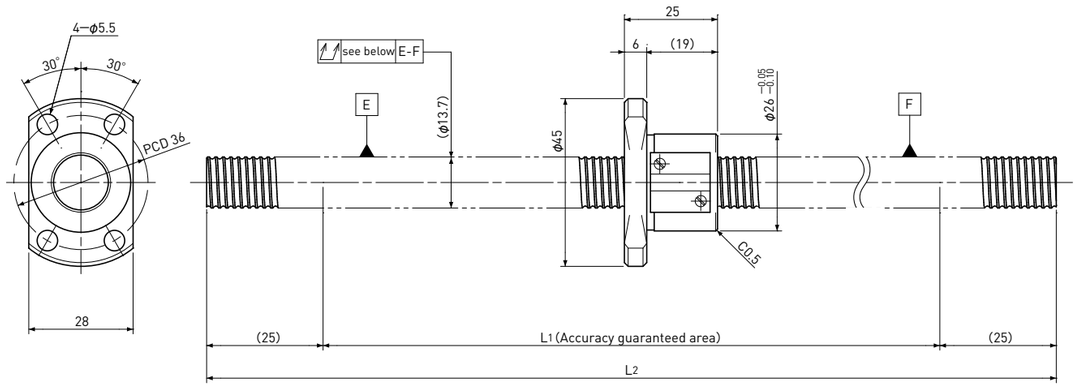

Unit : mm

Ball Screw Specifications	
Ball size	ϕ1.5875
Number of thread	1
Thread direction	Right
Shaft root dia.	ϕ12.6
Number of circuit	3.7×1
Shaft, Nut material	SCM415H
Surface hardness	HRC58～62 (Thread area)
Anti-rust treatment	Anti-rust oil

Unit : mm

Ball Screw Model	Travel	Grade	Shaft length		Lead accuracy		Total Run-out	Axial play	Preload Torque Nm	Basic Load Rating N	
			L_1	L_2	Travel deviation e_p	Variation V_{300}				Dynamic Ca	Static Coa
SR1402-500R500C7	425	Ct7	450	500	±0.07	0.05	0.080	～0.020	—	3200	7500
SR1402-500R500C10	425	Ct10	450	500	±0.31	0.21	0.160	～0.050			

Note) Please designate end-journal profile with your sketch.

Standard products in stock SR series

SR1404 | Shaft dia. ϕ14 Lead 4mm | Ct7&Ct10

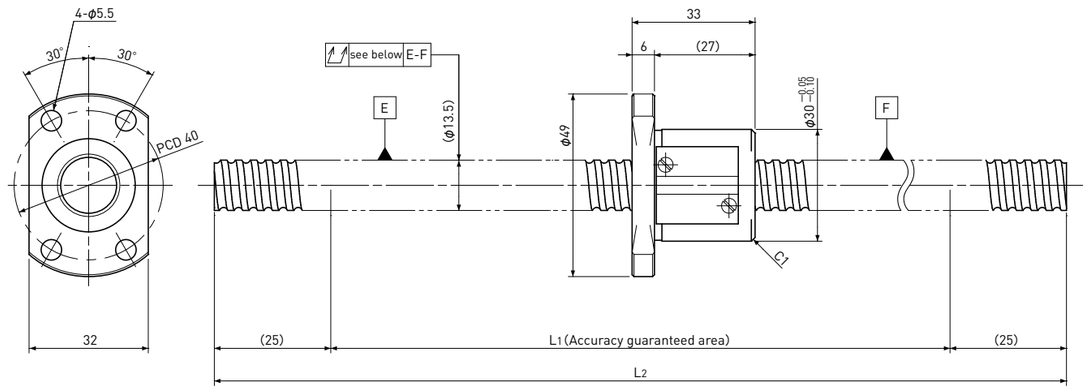

Unit : mm

Ball Screw Specifications	
Ball size	ϕ2.381
Number of thread	1
Thread direction	Right
Shaft root dia.	ϕ11.8
Number of circuit	3.7×1
Shaft, Nut material	SCM415H
Surface hardness	HRC58～62 (Thread area)
Anti-rust treatment	Anti-rust oil

Unit : mm

Ball Screw Model	Travel	Grade	Shaft length		Lead accuracy		Total Run-out	Axial play	Preload Torque Nm	Basic Load Rating N	
			L_1	L_2	Travel deviation e_p	Variation V_{300}				Dynamic Ca	Static Coa
SR1404-500R500C7	415	Ct7	450	500	±0.07	0.05	0.080	～0.020	—	5700	11600
SR1404-500R500C10	415	Ct10	450	500	±0.31	0.21	0.160	～0.050			

Note) Please designate end-journal profile with your sketch.

Standard products in stock SR series

SR1505 | Shaft dia. φ15 Lead 5mm | Ct10

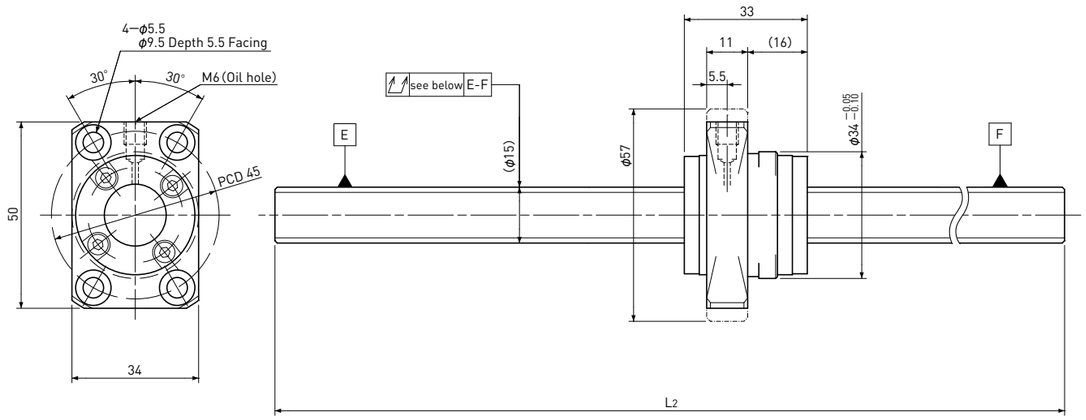

Unit : mm

Ball Screw Specifications		
Ball size		φ3.175
Number of thread		1
Thread direction		Right
Shaft root dia.		φ12.2
Number of circuit		3.7×1
Material	Shaft	SUJ2
	Nut	SCM415
Surface hardness		HRC58～62 (Thread area)
Anti-rust treatment		Anti-rust oil

Unit : mm

Ball Screw Model	Travel	Grade	Shaft length		Lead accuracy		Total Run-out	Axial play	Preload Torque Nm	Basic Load Rating N	
			L_1	L_2	Travel deviation e_p	Variation V_{300}				Dynamic Ca	Static Coa
SR1505-1000R1000C10	965	Ct10	—	1000	±0.7	0.21	0.400	～0.050	—	8900	17000

Note) Please designate end-journal profile with your sketch.

Standard products in stock SR series

SR1510 | Shaft dia. φ15 Lead 10mm | Ct10

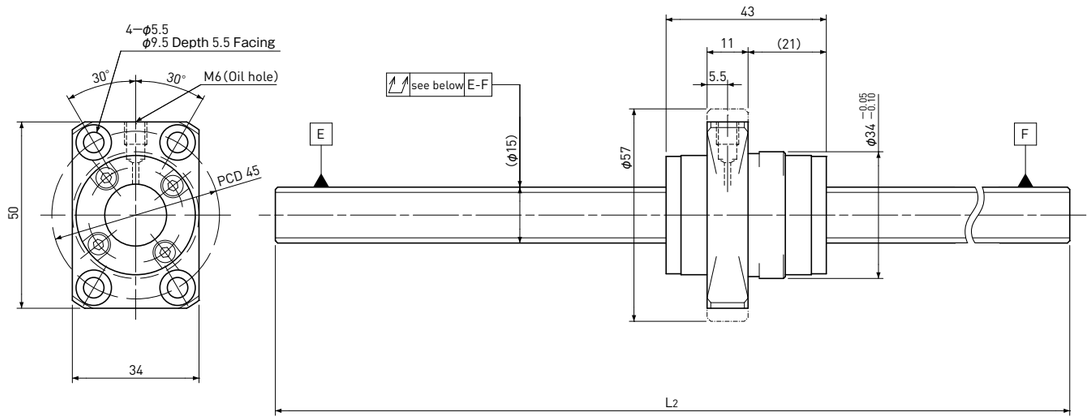

Unit : mm

Ball Screw Specifications		
Ball size		φ3.175
Number of thread		2
Thread direction		Right
Shaft root dia.		φ12.2
Number of circuit		2.7×2
Material	Shaft	SUJ2
	Nut	SCM415
Surface hardness		HRC58～62 (Thread area)
Anti-rust treatment		Anti-rust oil

Unit : mm

Ball Screw Model	Travel	Grade	Shaft length		Lead accuracy		Total Run-out	Axial play	Preload Torque Nm	Basic Load Rating N	
			L_1	L_2	Travel deviation e_p	Variation V_{300}				Dynamic Ca	Static Coa
SR1510-1000R1000C10	955	Ct10	—	1000	±0.7	0.21	0.400	～0.050	—	12000	25000

Note) Please designate end-journal profile with your sketch.

Standard products in stock SR series

SR1520 | Shaft dia. ϕ15 Lead 20mm | Ct10

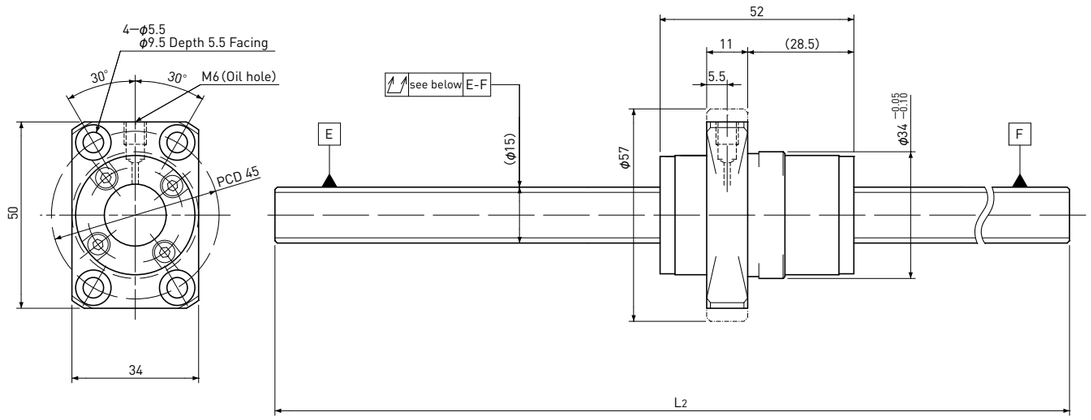

Unit : mm

Ball Screw Specifications		
Ball size		ϕ3.175
Number of thread		2
Thread direction		Right
Shaft root dia.		ϕ12.7
Number of circuit		1.7×2
Material	Shaft	SUJ2
	Nut	SCM415
Surface hardness		HRC58～62 (Thread area)
Anti-rust treatment		Anti-rust oil

Unit : mm

Ball Screw Model	Travel	Grade	Shaft length		Lead accuracy		Total Run-out	Axial play	Preload Torque Nm	Basic Load Rating N	
			L_1	L_2	Travel deviation e_p	Variation V_{300}				Dynamic Ca	Static Coa
SR1520-1000R1000C10	945	Ct10	—	1000	±0.7	0.21	0.400	～0.050	—	8000	16000

Note) Please designate end-journal profile with your sketch.

Standard products in stock SSR series

SSR0601 | Stainless Shaft dia.φ6 Lead 1mm | Ct7&Ct10

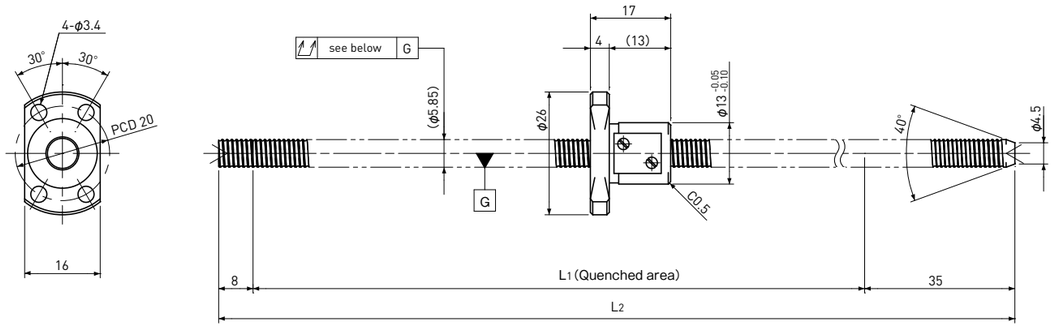

Unit :mm

Ball Screw Specifications	
Ball size	φ0.8
Number of thread	1
Thread direction	Right
Shaft root dia.	φ5.3
Number of circuit	3.7×1
Shaft,Nut material	SUS440C
Surface hardness	HRC55～ (Thread area)
Anti-rust treatment	Anti-rust oil

Unit :mm

Ball Screw Model	Travel	Grade	Shaft length		Lead accuracy		Total Run-out	Axial play	Preload Torque Nm	Basic Load Rating N	
			L_1	L_2	Travel deviation e_p	Variation V_{300}				Dynamic Ca	Static Coa
SSR0601-300C7	240	Ct7	257	300	±0.04	—	0.120	～0.020	—	560	900
SSR0601-300C10	240	Ct10	257	300	±0.17	—	0.240	～0.050			

Note) Please designate end-journal profile with your sketch.

Standard products in stock SSR series

SSR0801 | Stainless Shaft dia.φ8 Lead 1mm | Ct7&Ct10

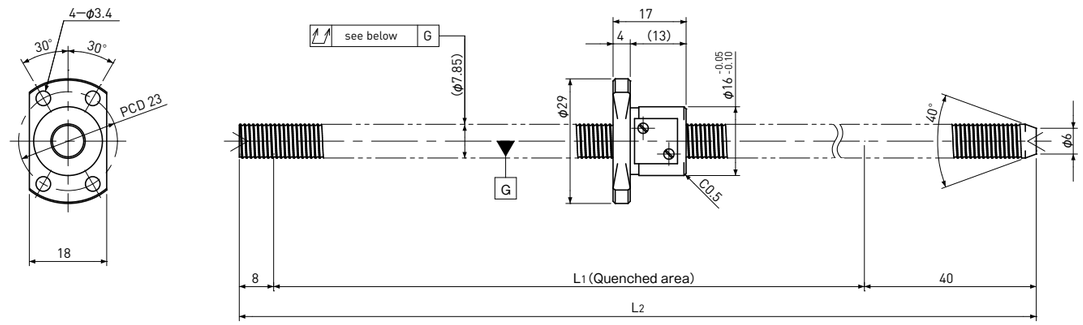

Unit :mm

Ball Screw Specifications	
Ball size	φ0.8
Number of thread	1
Thread direction	Right
Shaft root dia.	φ7.3
Number of circuit	3.7×1
Shaft,Nut material	SUS440C
Surface hardness	HRC55～ (Thread area)
Anti-rust treatment	Anti-rust oil

Unit :mm

Ball Screw Model	Travel	Grade	Shaft length		Lead accuracy		Total Run-out	Axial play	Preload Torque Nm	Basic Load Rating N	
			L_1	L_2	Travel deviation e_p	Variation V_{300}				Dynamic Ca	Static Coa
SSR0801-400C7	335	Ct7	352	400	±0.06	0.05	0.120	～0.020	—	630	1250
SSR0801-400C10	335	Ct10	352	400	±0.24	0.21	0.240	～0.050			

Note) Please designate end-journal profile with your sketch.

Standard products in stock SSR series

SSR0802 | Stainless Shaft dia.φ8 Lead 2mm | Ct7&Ct10

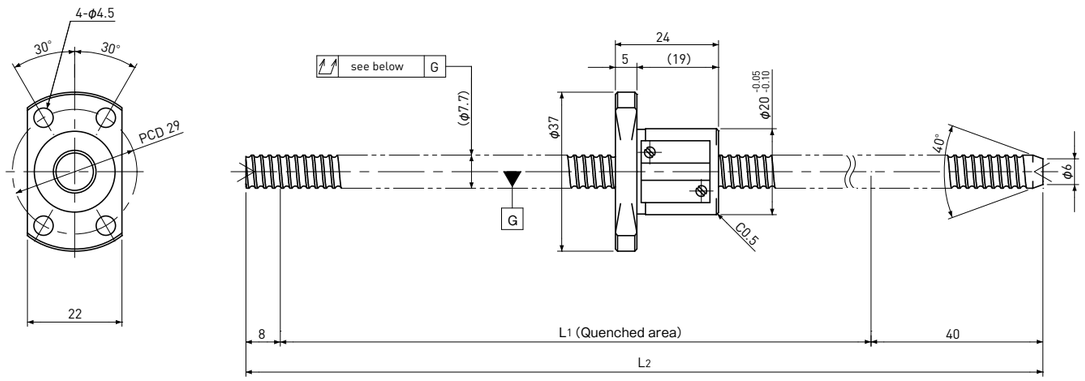

Unit :mm

Ball Screw Specifications	
Ball size	φ1.5875
Number of thread	1
Thread direction	Right
Shaft root dia.	φ6.6
Number of circuit	3.7×1
Shaft,Nut material	SUS440C
Surface hardness	HRC55～ (Thread area)
Anti-rust treatment	Anti-rust oil

Unit :mm

Ball Screw Model	Travel	Grade	Shaft length		Lead accuracy		Total Run-out	Axial play	Preload Torque Nm	Basic Load Rating N	
			L_1	L_2	Travel deviation e_p	Variation V_{300}				Dynamic Ca	Static Coa
SSR0802-400C7	325	Ct7	352	400	±0.06	0.05	0.120	～0.020	—	1950	3100
SSR0802-400C10	325	Ct10	352	400	±0.24	0.21	0.240	～0.050			

Note) Please designate end-journal profile with your sketch.

Standard products in stock SSR series

SSR1002 | Stainless Shaft dia.φ10 Lead 2mm | Ct7&Ct10

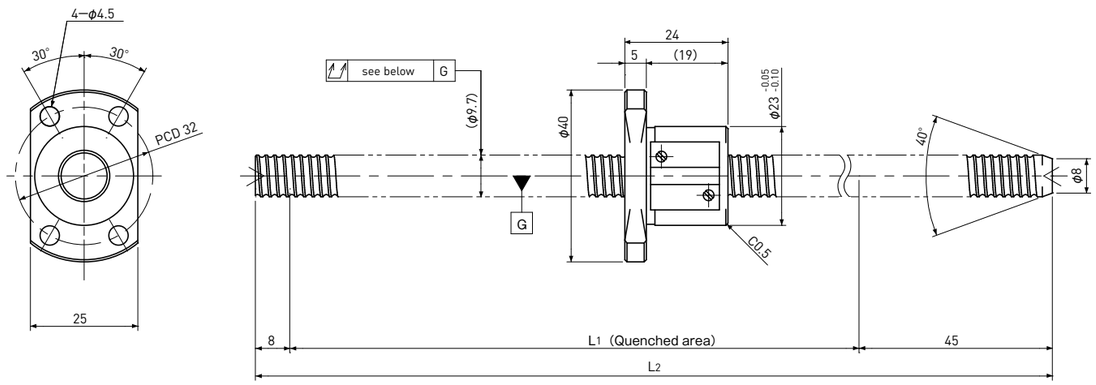

Unit :mm

Ball Screw Specifications	
Ball size	φ1.5875
Number of thread	1
Thread direction	Right
Shaft root dia.	φ8.6
Number of circuit	3.7×1
Shaft,Nut material	SUS440C
Surface hardness	HRC55～ (Thread area)
Anti-rust treatment	Anti-rust oil

Unit :mm

Ball Screw Model	Travel	Grade	Shaft length		Lead accuracy		Total Run-out	Axial play	Preload Torque Nm	Basic Load Rating N	
			L_1	L_2	Travel deviation e_p	Variation V_{300}				Dynamic Ca	Static Coa
SSR1002-400C7	320	Ct7	347	400	±0.06	0.05	0.080	～0.020	—	2200	4000
SSR1002-400C10	320	Ct10	347	400	±0.24	0.21	0.160	～0.050			

Note) Please designate end-journal profile with your sketch.

SRT/SSRT series
Standardized Rolled Ball Screws with Integrated end-journal

For production reason, Rolled Ball Screws are normally necessary to have smaller end-journal, but as KSS has adopted special technology, it enables fixed end-journal bigger than Shaft diameter alike Ground Ball Screws. This technology enables stable and more flexible on end-journal design.

●Features

- Design flexibility and wide use of Bearings on end-journal.
- Compatible end-journal to Precision Ball Screws.
- No need to insert or press fit collar as Bearing shoulder.
- Quick delivery due to unfinished end-journal stock.
- Stainless Rolled Ball Screws are also available.

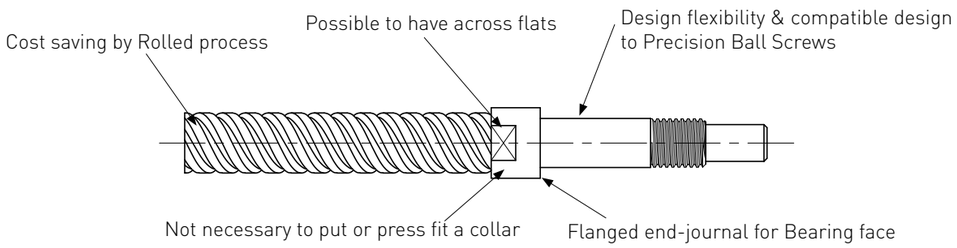

●Comparison with current model

***Shaft nominal diameter : ϕ10mm

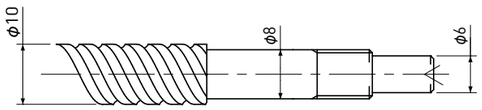

Current model design

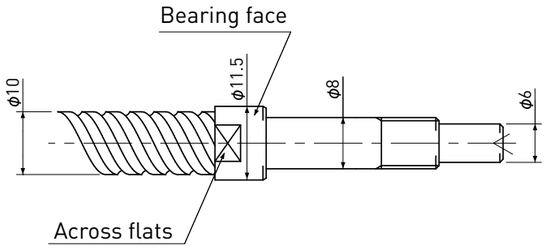

New model design

●Combination of Shaft nominal dia. & Lead

Unit : mm

Shaft dia. \ Lead	1	2	2.5	4	5	6	8	10	12	15	20
4	A289 A290	A291									
5				A292							
6	A293 A294 A315	A295				A296		A297			
8	A298 A299 A316	A300 A301 A317	A302		A303		A304		A305		
10		A306 A307 A318			A308			A309		A310	A311
12		A312 A313						A314			

Note 1) Yellow cells are available for Stainless Shaft and Nut.
Note 2) The numbers in a table : showing a page in this catalogue

●Accuracy Grade & Axial play

The grade of SRT/SSRT series (Standardized Rolled & Stainless Rolled Ball Screws with Integrated end-journal) are Ct7 and Ct10(JIS B 1192-3).
According to accuracy grade, Axial play 0.020mm or less (Ct7) and 0.050mm or less(Ct10) are in stock.

●Material & Surface hardness

The material and hardness of SRT/SSRT series (Standardized Rolled & Stainless Rolled Ball Screws with Integrated end-journal) are as follows.

Products	Material of thread area	Heat treatment	Surface hardness
Rolled Ball Screws (SRT series)	Shaft : SCM415 S55C	Carburizing and Quenching Induction hardening	HRC58 or more
	Nut : SCM415		
Stainless Rolled Ball Screws (SSRT series)	Shaft : SUS440C	Induction hardening	HRC55 or more
	Nut : SUS440C	Vacuum hardening	

●Lubrication

SRT/SSRT series (Standardized Rolled & Stainless Rolled Ball Screws with Integrated end-journal) will be supplied with anti-rust oil.
This oil is not lubricant, when Ball Screw operates, lubricant should be applied.
If there is no specific instruction, KSS would recommend our original Grease (MSG No.2) as standard lubricant. Please feel free to contact us.

●Precision Rolled Ball Screws

High accuracy(JIS C5) can be produced by Rolled process, what we call Precision Rolled Ball Screws(PSR/PSRT series).Please see page A319.

●Model number notation

SRT	04	01	K	—	086	R	126	C7	B	1	X
①	②	③	④		⑤	⑥	⑦	⑧	⑨	⑩	⑪

①Rolled Ball Screws Series No.
SRT ：Rolled Ball Screws with Integrated end-journal
SSRT ：Stainless Rolled Ball Screws with Integrated end-journal
②Screw Shaft nominal diameter(mm)
③Lead(mm)
④Ball Nut type
None：Standard
K：Compact type
⑤Screw thread length(mm)
(Specify in 1mm unit after end-journal machining)
⑥Thread direction(R=Right-hand)
⑦Screw Shaft total length(mm)
(Specify in 1mm units)
⑧Accuracy grade(C7 or C10)
⑨Shaft end-journal profile
Refer to Fig. A-24 below：A-type,B-type,C-type,
D-type(other)
⑩Anti-rust oil or Lubricant
0：KSS grease(MSG No.2)
1：Anti-rust oil(Non Ruster PZ2)
2：Multemp PS2 grease
3：Other
⑪Nut Flange direction(Refer to Fig. A-25 below)

Fig. A-24：Shaft end-journal profile

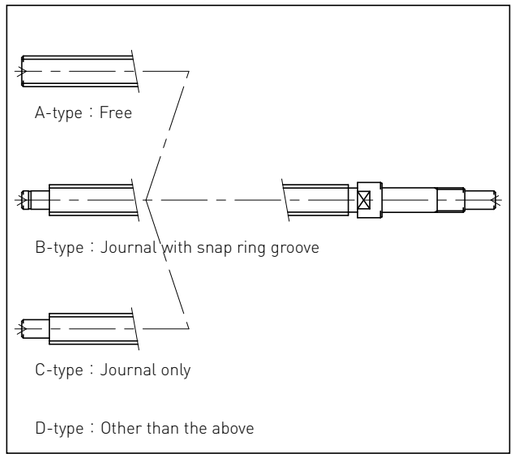

Fig. A-25：Nut Flange direction

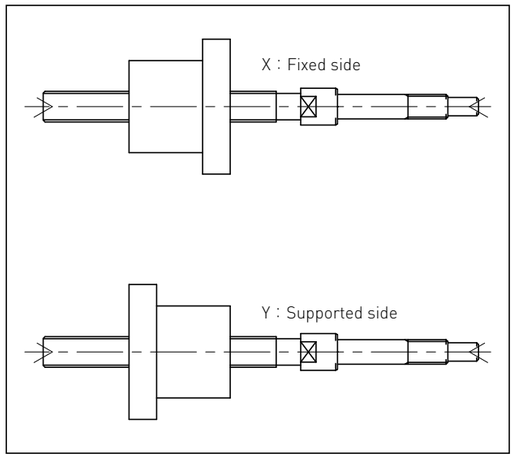

●Note

1)The detail of end-journal dimension for each size is shown from next page.
2)KSS does not make additional Nut machining.
3)The specification is subject to change without notice.
4)If the other configuration except (A,B,C)is requested, please contact KSS.

Standard products in stock SRT series

SRT0401 | Shaft dia. ϕ4 Lead 1mm | Ct7&Ct10

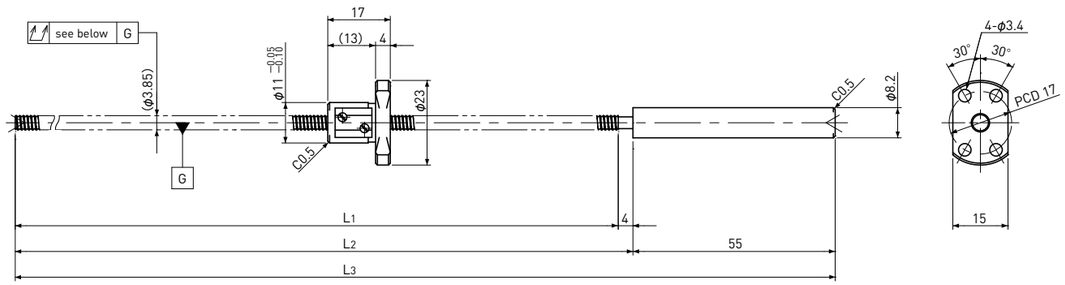

Unit :mm

Ball Screw Specifications		
Ball size		ϕ0.8
Number of thread		1
Thread direction		Right
Shaft root dia.		ϕ3.3
Number of circuit		3.7×1
Material	Shaft	SCM415H+SUS303
	Nut	SCM415H
Surface hardness		HRC58～ (Thread area)
Anti-rust treatment		Anti-rust oil

End-journal profile Supported-side

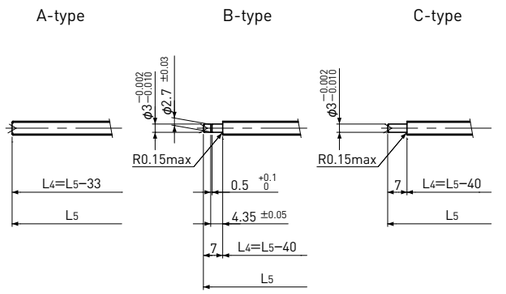

Fixed-side

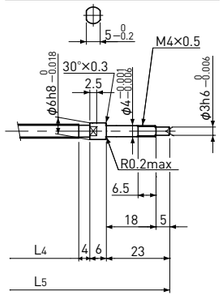

L4:Thread length after end-journal machining.
L5:Total length after end-journal machining.

Support-unit Recommendation		
	Supported-side :	MSU-4CS/4G
	Fixed-side :	MSU-4C/4G

D-type : Other than the above.

Unit :mm

Ball Screw Model	Travel	Grade	Shaft length L1	Shaft length L2	Shaft length L3	Lead accuracy: Travel deviation e_p	Lead accuracy: Variation V_{300}	Total Run-out	Axial play	Preload Torque Nm	Basic Load Rating N: Dynamic Ca	Basic Load Rating N: Static Coa
SRT0401-96R155C7	75	Ct7	96	100	155	±0.02	—	0.080	～0.020	—	560	790
SRT0401-216R275C7	195	Ct7	216	220	275	±0.03	—	0.120				
SRT0401-96R155C10	75	Ct10	96	100	155	±0.06	—	0.160	～0.050			
SRT0401-216R275C10	195	Ct10	216	220	275	±0.15	—	0.240				

Note)Please refer to page A287 for order code of end-journal machining.

Standard products in stock SRT series

SRT0401K | Compact Nut Shaft dia. ϕ4 Lead 1mm | Ct7&Ct10

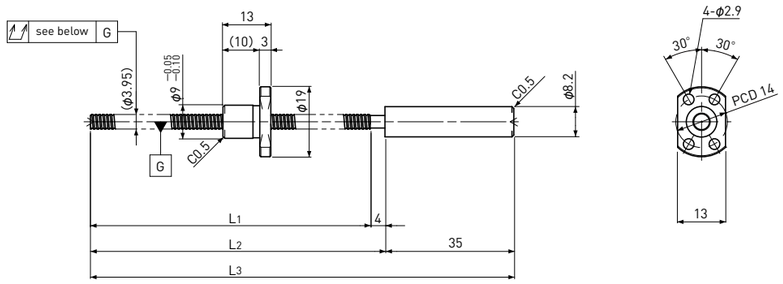

Unit :mm

Ball Screw Specifications		
Ball size		ϕ0.6
Number of thread		1
Thread direction		Right
Shaft root dia.		ϕ3.4
Number of circuit		1×3
Material	Shaft	S55C+SUS303
	Nut	SCM415H
Surface hardness		HRC58～ (Thread area)
Anti-rust treatment		Anti-rust oil

End-journal profile Supported-side

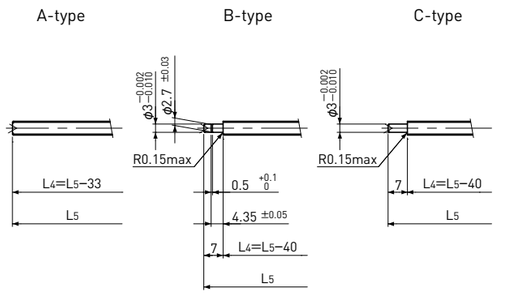

Fixed-side

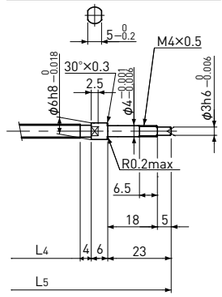

L4:Thread length after end-journal machining.
L5:Total length after end-journal machining.

Support-unit Recommendation		
	Supported-side :	MSU-4CS/4GS
	Fixed-side :	MSU-4C/4G

D-type : Other than the above.

Unit :mm

Ball Screw Model	Travel	Grade	Shaft length L1	Shaft length L2	Shaft length L3	Lead accuracy: Travel deviation e_p	Lead accuracy: Variation V_{300}	Total Run-out	Axial play	Preload Torque Nm	Basic Load Rating N: Dynamic Ca	Basic Load Rating N: Static Coa
SRT0401K-76R115C7	60	Ct7	76	80	115	±0.02	—	0.080	～0.020	—	300	430
SRT0401K-76R115C10	60	Ct10	76	80	115	±0.05	—	0.160	～0.050			

Note)Please refer to page A287 for order code of end-journal machining.

Standard products in stock SRT series

SRT0402 | Shaft dia. ϕ4 Lead 2mm | Ct7&Ct10

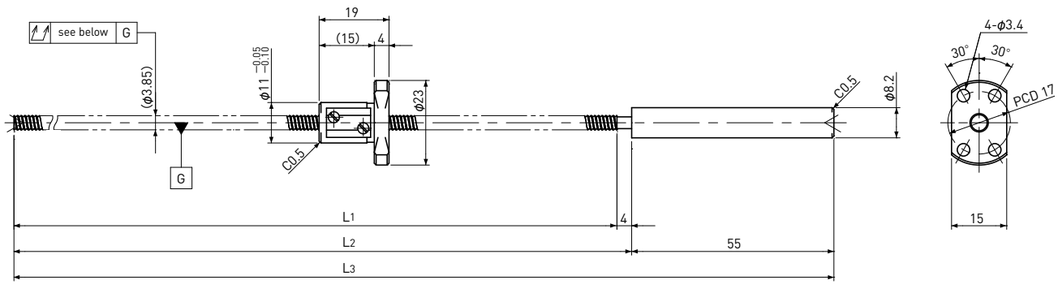

Unit :mm

Ball Screw Specifications		
Ball size		ϕ0.8
Number of thread		1
Thread direction		Right
Shaft root dia.		ϕ3.3
Number of circuit		2.7×1
Material	Shaft	SCM415H+SUS303
	Nut	SCM415H
Surface hardness		HRC58～ (Thread area)
Anti-rust treatment		Anti-rust oil

End-journal profile Supported-side

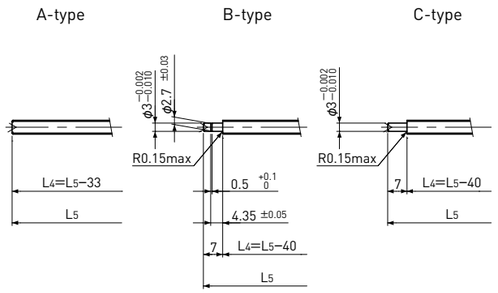

Fixed-side

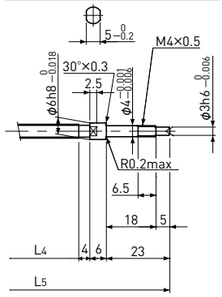

L4:Thread length after end-journal machining.
L5:Total length after end-journal machining.

Support-unit Recommendation		
	Supported-side :	MSU-4CS/4GS
	Fixed-side :	MSU-4C/4G

D-type : Other than the above.

Unit :mm

Ball Screw Model	Travel	Grade	Shaft length L1	Shaft length L2	Shaft length L3	Lead accuracy: Travel deviation e_p	Lead accuracy: Variation V_{300}	Total Run-out	Axial play	Preload Torque Nm	Basic Load Rating N: Dynamic Ca	Basic Load Rating N: Static Coa
SRT0402-96R155C7	75	Ct7	96	100	155	±0.02	—	0.080	～0.020	—	420	570
SRT0402-216R275C7	195	Ct7	216	220	275	±0.03	—	0.120				
SRT0402-96R155C10	75	Ct10	96	100	155	±0.06	—	0.160	～0.050			
SRT0402-216R275C10	195	Ct10	216	220	275	±0.15	—	0.240				

Note)Please refer to page A287 for order code of end-journal machining.

Standard products in stock SRT series

SRT0504 | Shaft dia. ϕ5 Lead 4mm | Ct7&Ct10

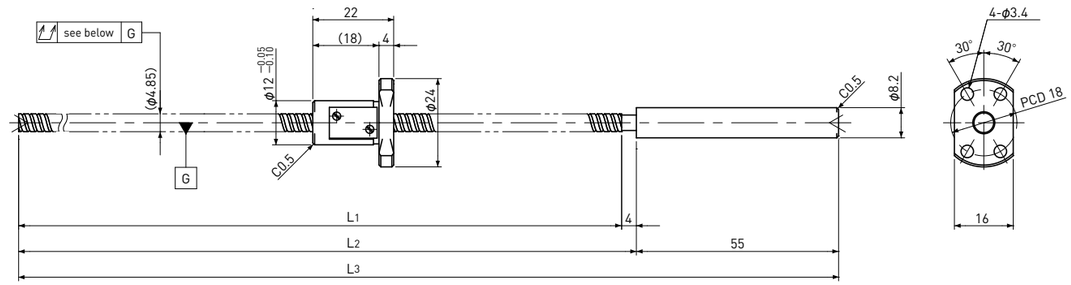

Unit :mm

Ball Screw Specifications		
Ball size		ϕ0.8
Number of thread		1
Thread direction		Right
Shaft root dia.		ϕ4.3
Number of circuit		2.7×1
Material	Shaft	SCM415H+SUS303
	Nut	SCM415H
Surface hardness		HRC58～ (Thread area)
Anti-rust treatment		Anti-rust oil

End-journal profile Supported-side

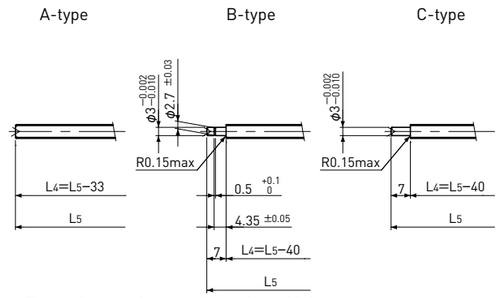

Fixed-side

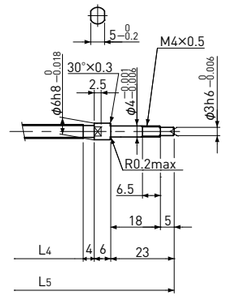

L4:Thread length after end-journal machining.
L5:Total length after end-journal machining.

Support-unit Recommendation		
	Supported-side :	MSU-4CS/4GS
	Fixed-side :	MSU-4C/4G

D-type : Other than the above.

Unit :mm

Ball Screw Model	Travel	Grade	Shaft length L1	Shaft length L2	Shaft length L3	Lead accuracy: Travel deviation e_p	Lead accuracy: Variation V_{300}	Total Run-out	Axial play	Preload Torque Nm	Basic Load Rating N: Dynamic Ca	Basic Load Rating N: Static Coa
SRT0504-96R155C7	70	Ct7	96	100	155	±0.02	—	0.080	～0.020	—	470	720
SRT0504-216R275C7	190	Ct7	216	220	275	±0.03	—	0.120				
SRT0504-96R155C10	70	Ct10	96	100	155	±0.06	—	0.160	～0.050			
SRT0504-216R275C10	190	Ct10	216	220	275	±0.15	—	0.240				

Note)Please refer to page A287 for order code of end-journal machining.

Standard products in stock SRT series

SRT0601 | Shaft dia. $\phi 6$ Lead 1mm | Ct7&Ct10

＊Please refer to page A315 for stainless steel type.

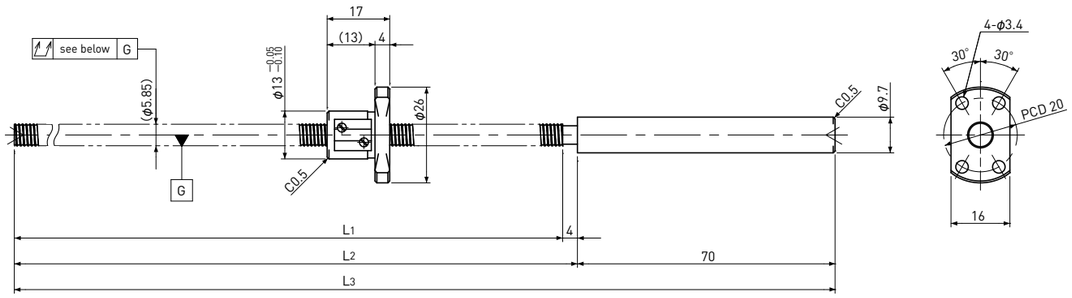

Unit :mm

Ball Screw Specifications		
Ball size		$\phi 0.8$
Number of thread		1
Thread direction		Right
Shaft root dia.		$\phi 5.3$
Number of circuit		3.7×1
Material	Shaft	SCM415H+SUS303
	Nut	SCM415H
Surface hardness		HRC58～ (Thread area)
Anti-rust treatment		Anti-rust oil

End-journal profile Supported-side

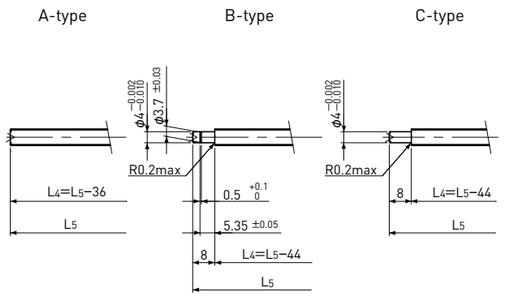

Fixed-side

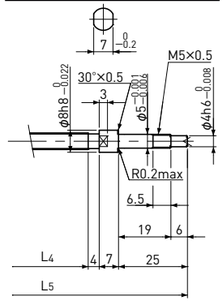

L4:Thread length after end-journal machining.
L5:Total length after end-journal machining.

Support-unit Recommendation			
	Supported-side	:	MSU-5CS/5GS
	Fixed-side	:	MSU-5C/5G

D-type : Other than the above.

Unit :mm

Ball Screw Model	Travel	Grade	Shaft length L1	L2	L3	Lead accuracy: Travel deviation ep	Variation V300	Total Run-out	Axial play	Preload Torque Nm	Basic Load Rating N: Dynamic Ca	Static Coa
SRT0601-146R220C7	125	Ct7	146	150	220	±0.02	—	0.080	～0.020	—	680	1200
SRT0601-261R335C7	240	Ct7	261	265	335	±0.04	—	0.120				
SRT0601-146R220C10	125	Ct10	146	150	220	±0.10	—	0.160	～0.050			
SRT0601-261R335C10	240	Ct10	261	265	335	±0.18	—	0.240				

Note)Please refer to page A287 for order code of end-journal machining.

Standard products in stock SRT series

SRT0601K | Compact Nut Shaft dia. $\phi 6$ Lead 1mm | Ct7&Ct10

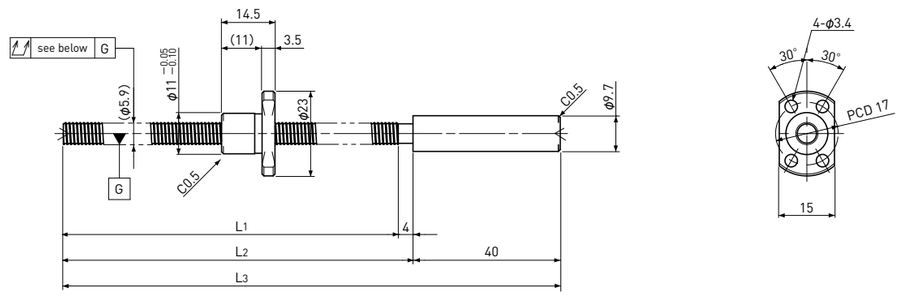

Unit :mm

Ball Screw Specifications		
Ball size		$\phi 0.8$
Number of thread		1
Thread direction		Right
Shaft root dia.		$\phi 5.3$
Number of circuit		1×3
Material	Shaft	S55C+SUS303
	Nut	SCM415H
Surface hardness		HRC58～ (Thread area)
Anti-rust treatment		Anti-rust oil

End-journal profile Supported-side

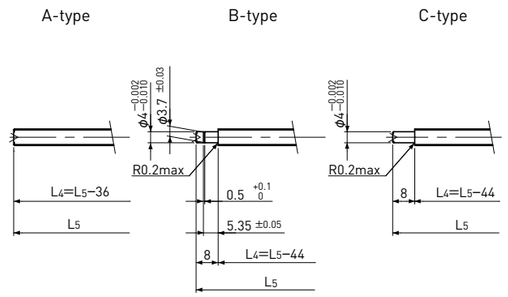

Fixed-side

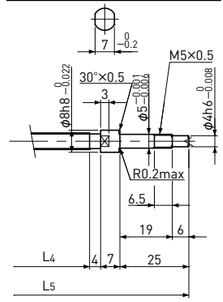

L4:Thread length after end-journal machining.
L5:Total length after end-journal machining.

Support-unit Recommendation			
	Supported-side	:	MSU-5CS/5GS
	Fixed-side	:	MSU-5C/5G

D-type : Other than the above.

Unit :mm

Ball Screw Model	Travel	Grade	Shaft length L1	L2	L3	Lead accuracy: Travel deviation ep	Variation V300	Total Run-out	Axial play	Preload Torque Nm	Basic Load Rating N: Dynamic Ca	Static Coa
SRT0601K-91R135C7	70	Ct7	91	95	135	±0.02	—	0.080	～0.020	—	560	950
SRT0601K-91R135C10	70	Ct10	91	95	135	±0.06	—	0.160	～0.050			

Note)Please refer to page A287 for order code of end-journal machining.

Standard products in stock SRT series

SRT0602 | Shaft dia. φ6 Lead 2mm | Ct7&Ct10 |

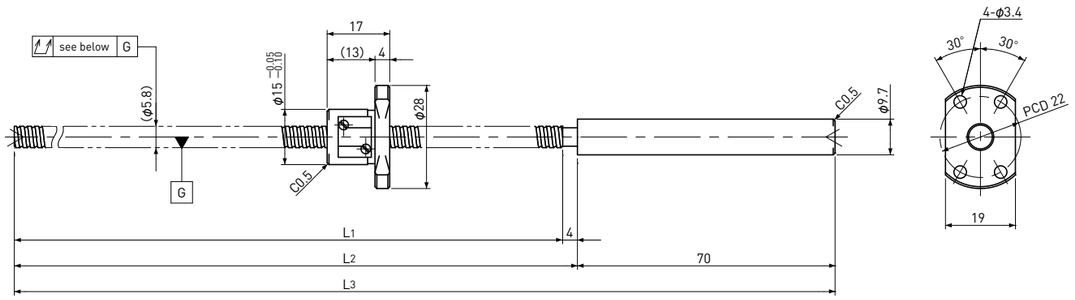

Unit :mm

Ball Screw Specifications		
Ball size		φ1.0
Number of thread		1
Thread direction		Right
Shaft root dia.		φ5.1
Number of circuit		2.7×1
Material	Shaft	SCM415H+SUS303
	Nut	SCM415H
Surface hardness		HRC58～ (Thread area)
Anti-rust treatment		Anti-rust oil

End-journal profile Supported-side

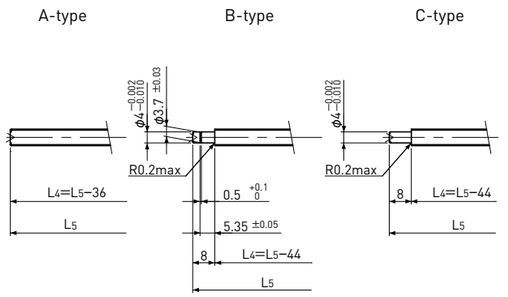

Fixed-side

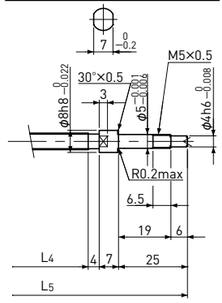

L4:Thread length after end-journal machining.
L5:Total length after end-journal machining.

Support-unit Recommendation		
Supported-side	:	MSU-5CS/5GS
Fixed-side	:	MSU-5C/5G

D-type : Other than the above.

Unit :mm

Ball Screw Model	Travel	Grade	Shaft length L1	Shaft length L2	Shaft length L3	Lead accuracy: Travel deviation ep	Lead accuracy: Variation V300	Total Run-out	Axial play	Preload Torque Nm	Basic Load Rating N: Dynamic Ca	Basic Load Rating N: Static Coa
SRT0602-146R220C7	125	Ct7	146	150	220	±0.02	—	0.080	～0.020	—	750	1200
SRT0602-261R335C7	240	Ct7	261	265	335	±0.04	—	0.120				
SRT0602-146R220C10	125	Ct10	146	150	220	±0.10	—	0.160	～0.050			
SRT0602-261R335C10	240	Ct10	261	265	335	±0.18	—	0.240				

Note)Please refer to page A287 for order code of end-journal machining.

Standard products in stock SRT series

SRT0606 | Shaft dia. φ6 Lead 6mm | Ct7&Ct10 |

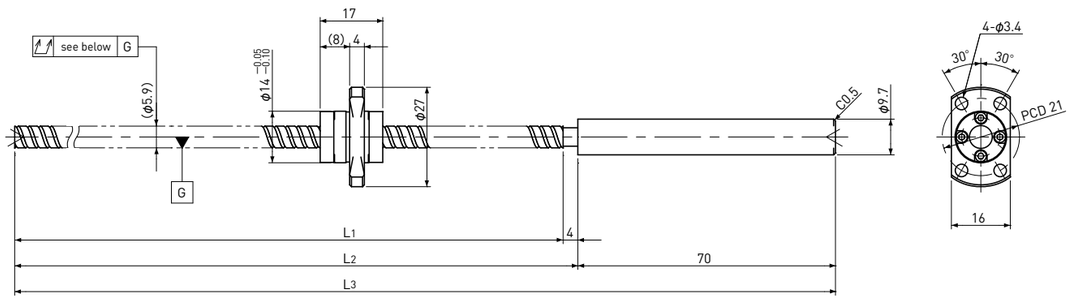

Unit :mm

Ball Screw Specifications		
Ball size		φ1.0
Number of thread		2
Thread direction		Right
Shaft root dia.		φ5.2
Number of circuit		1.6×2
Material	Shaft	SCM415H+SUS303
	Nut	SCM415H
Surface hardness		HRC58～ (Thread area)
Anti-rust treatment		Anti-rust oil

End-journal profile Supported-side

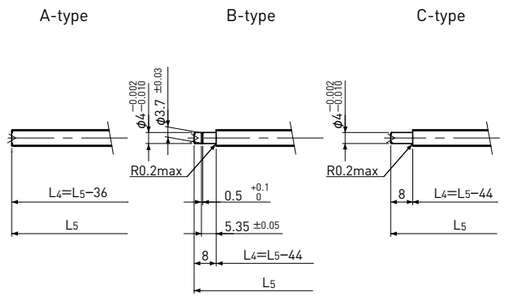

Fixed-side

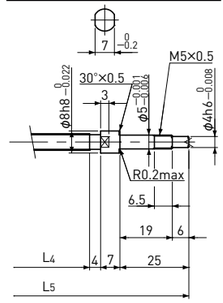

L4:Thread length after end-journal machining.
L5:Total length after end-journal machining.

Support-unit Recommendation		
Supported-side	:	MSU-5CS/5GS
Fixed-side	:	MSU-5C/5G

D-type : Other than the above.

Unit :mm

Ball Screw Model	Travel	Grade	Shaft length L1	Shaft length L2	Shaft length L3	Lead accuracy: Travel deviation ep	Lead accuracy: Variation V300	Total Run-out	Axial play	Preload Torque Nm	Basic Load Rating N: Dynamic Ca	Basic Load Rating N: Static Coa
SRT0606-146R220C7	125	Ct7	146	150	220	±0.02	—	0.080	～0.020	—	870	1450
SRT0606-261R335C7	240	Ct7	261	265	335	±0.04	—	0.120				
SRT0606-146R220C10	125	Ct10	146	150	220	±0.10	—	0.160	～0.050			
SRT0606-261R335C10	240	Ct10	261	265	335	±0.18	—	0.240				

Note)Please refer to page A287 for order code of end-journal machining.

Standard products in stock SRT series

SRT0610 | Shaft dia. ϕ6 Lead 10mm | Ct7&Ct10 |

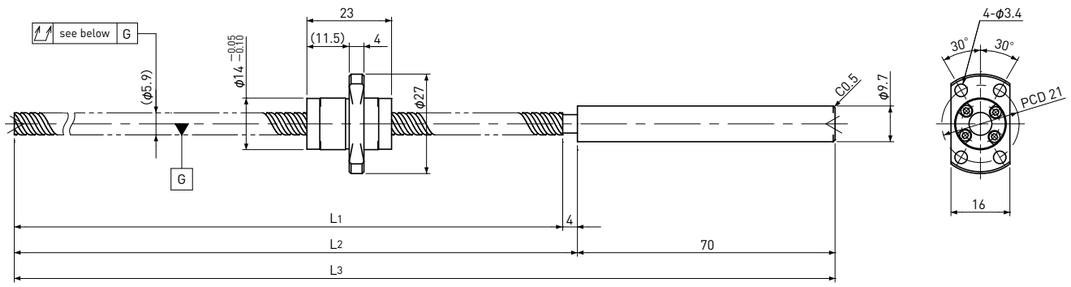

Unit :mm

Ball Screw Specifications		
Ball size		ϕ1.2
Number of thread		2
Thread direction		Right
Shaft root dia.		ϕ5.0
Number of circuit		1.2×2
Material	Shaft	SCM415H+SUS303
	Nut	SCM415H
Surface hardness		HRC58～ (Thread area)
Anti-rust treatment		Anti-rust oil

End-journal profile Supported-side

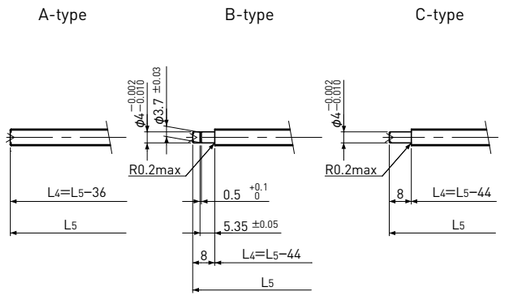

Fixed-side

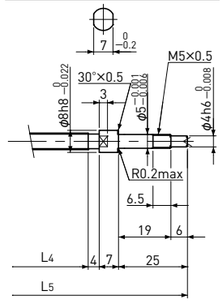

L4:Thread length after end-journal machining.
L5:Total length after end-journal machining.

Support-unit Recommendation		
Supported-side	:	MSU-5CS/5GS
Fixed-side	:	MSU-5C/5G

D-type : Other than the above.

Unit :mm

Ball Screw Model	Travel	Grade	Shaft length			Lead accuracy		Total Run-out	Axial play	Preload Torque Nm	Basic Load Rating N	
			L_1	L_2	L_3	Travel deviation e_p	Variation V_{300}				Dynamic Ca	Static Coa
SRT0610-146R220C7	120	Ct7	146	150	220	±0.02	—	0.080	～0.020	—	950	1600
SRT0610-261R335C7	235	Ct7	261	265	335	±0.04	—	0.120				
SRT0610-146R220C10	120	Ct10	146	150	220	±0.10	—	0.160	～0.050			
SRT0610-261R335C10	235	Ct10	261	265	335	±0.18	—	0.240				

Note)Please refer to page A287 for order code of end-journal machining.

Standard products in stock SRT series

SRT0801 | Shaft dia. ϕ8 Lead 1mm | Ct7&Ct10 |

＊Please refer to page A316 for stainless steel type.

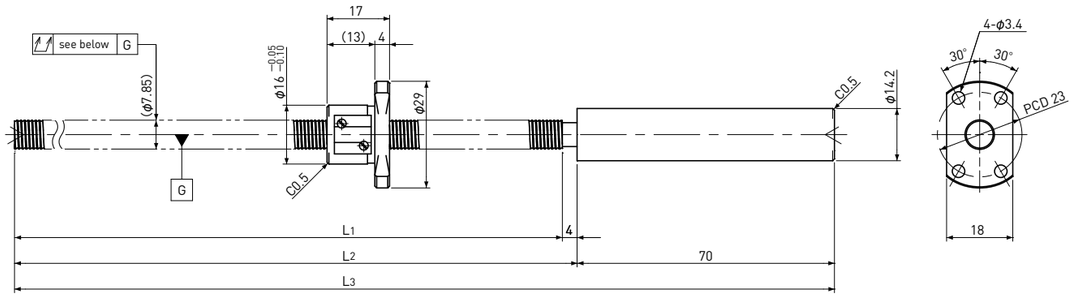

Unit :mm

Ball Screw Specifications		
Ball size		ϕ0.8
Number of thread		1
Thread direction		Right
Shaft root dia.		ϕ7.3
Number of circuit		3.7×1
Material	Shaft	SCM415H+SUS303
	Nut	SCM415H
Surface hardness		HRC58～ (Thread area)
Anti-rust treatment		Anti-rust oil

End-journal profile Supported-side

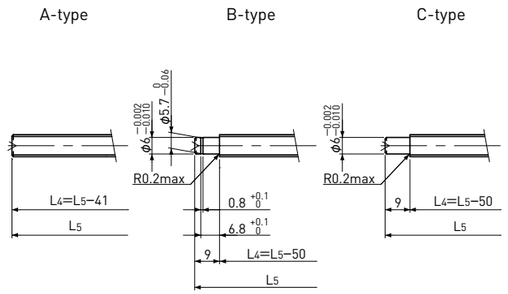

Fixed-side

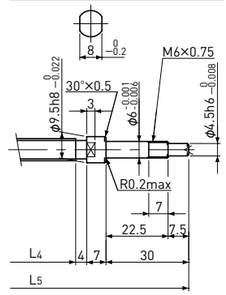

L4:Thread length after end-journal machining.
L5:Total length after end-journal machining.

Support-unit Recommendation		
Supported-side	:	MSU-6CS/6GS
Fixed-side	:	MSU-6C/6G

D-type : Other than the above.

Unit :mm

Ball Screw Model	Travel	Grade	Shaft length			Lead accuracy		Total Run-out	Axial play	Preload Torque Nm	Basic Load Rating N	
			L_1	L_2	L_3	Travel deviation e_p	Variation V_{300}				Dynamic Ca	Static Coa
SRT0801-196R270C7	175	Ct7	196	200	270	±0.03	—	0.080	～0.020	—	780	1650
SRT0801-356R430C7	335	Ct7	356	360	430	±0.06	0.05	0.120				
SRT0801-196R270C10	175	Ct10	196	200	270	±0.13	—	0.160	～0.050			
SRT0801-356R430C10	335	Ct10	356	360	430	±0.24	0.21	0.240				

Note)Please refer to page A287 for order code of end-journal machining.

Standard products in stock SRT series

SRT0801K | Compact Nut Shaft dia. φ8 Lead 1mm | Ct7&Ct10

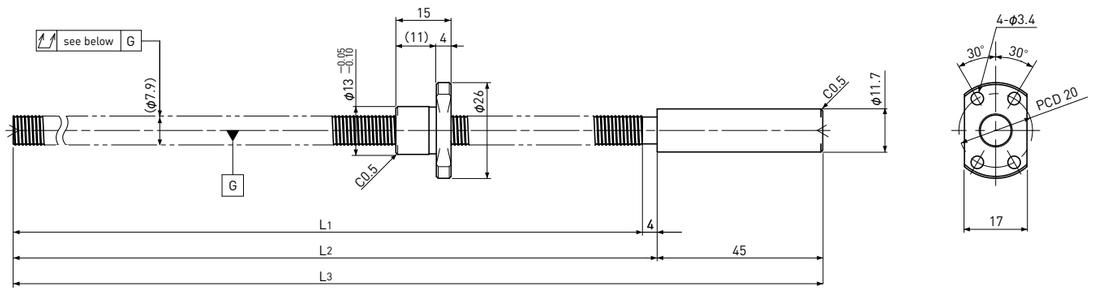

Unit :mm

Ball Screw Specifications		
Ball size		φ0.8
Number of thread		1
Thread direction		Right
Shaft root dia.		φ7.3
Number of circuit		1×3
Material	Shaft	S55C+SUS303
	Nut	SCM415H
Surface hardness		HRC58～ (Thread area)
Anti-rust treatment		Anti-rust oil

End-journal profile Supported-side

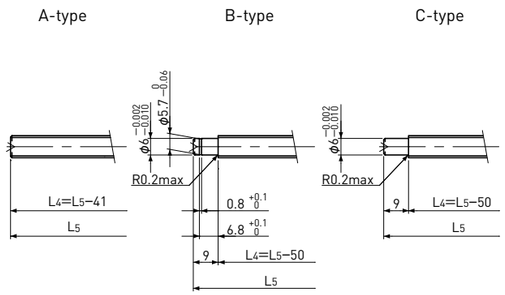

Fixed-side

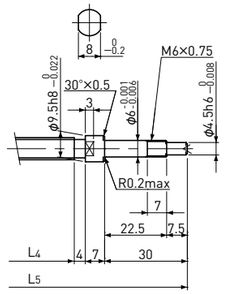

L4:Thread length after end-journal machining.
L5:Total length after end-journal machining.

Support-unit Recommendation		
Supported-side	:	MSU-6CS/6GS
Fixed-side	:	MSU-6C/6G

D-type : Other than the above.

Unit :mm

Ball Screw Model	Travel	Grade	Shaft length			Lead accuracy		Total Run-out	Axial play	Preload Torque Nm	Basic Load Rating N	
			L_1	L_2	L_3	Travel deviation e_p	Variation V_{300}				Dynamic Ca	Static Coa
SRT0801K-171R220C7	150	Ct7	171	175	220	±0.03	—	0.080	～0.020	—	650	1300
SRT0801K-171R220C10	150	Ct10	171	175	220	±0.11	—	0.160	～0.050			

Note)Please refer to page A287 for order code of end-journal machining.

Standard products in stock SRT series

SRT0802 | Shaft dia. φ8 Lead 2mm | Ct7&Ct10

＊Please refer to page A317 for stainless steel type.

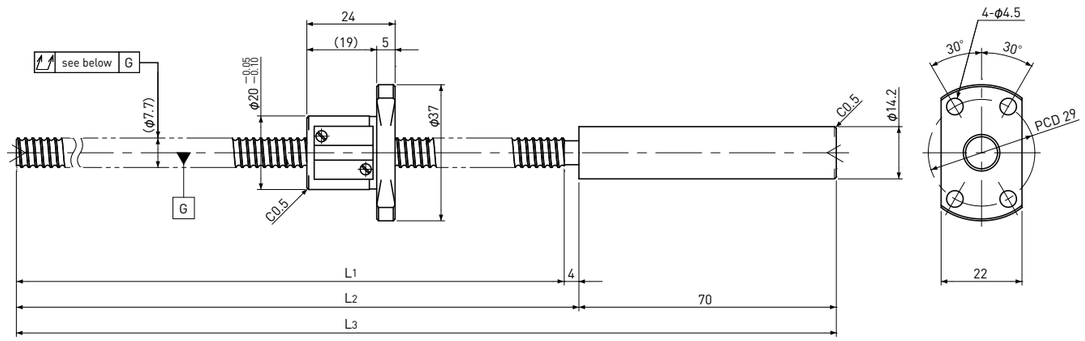

Unit :mm

Ball Screw Specifications		
Ball size		φ1.5875
Number of thread		1
Thread direction		Right
Shaft root dia.		φ6.6
Number of circuit		3.7×1
Material	Shaft	SCM415H+SUS303
	Nut	SCM415H
Surface hardness		HRC58～ (Thread area)
Anti-rust treatment		Anti-rust oil

End-journal profile Supported-side

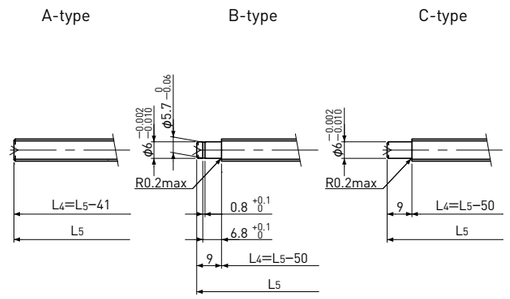

Fixed-side

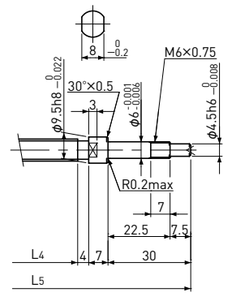

L4:Thread length after end-journal machining.
L5:Total length after end-journal machining.

Support-unit Recommendation		
Supported-side	:	MSU-6CS/6GS
Fixed-side	:	MSU-6C/6G

D-type : Other than the above.

Unit :mm

Ball Screw Model	Travel	Grade	Shaft length			Lead accuracy		Total Run-out	Axial play	Preload Torque Nm	Basic Load Rating N	
			L_1	L_2	L_3	Travel deviation e_p	Variation V_{300}				Dynamic Ca	Static Coa
SRT0802-196R270C7	170	Ct7	196	200	270	±0.03	—	0.080	～0.020	—	2400	4100
SRT0802-356R430C7	330	Ct7	356	360	430	±0.06	0.05	0.120				
SRT0802-196R270C10	170	Ct10	196	200	270	±0.13	—	0.160	～0.050			
SRT0802-356R430C10	330	Ct10	356	360	430	±0.24	0.21	0.240				

Note)Please refer to page A287 for order code of end-journal machining.

Standard products in stock SRT series

SRT0802K | Compact Nut Shaft dia. φ8 Lead 2mm | Ct7&Ct10

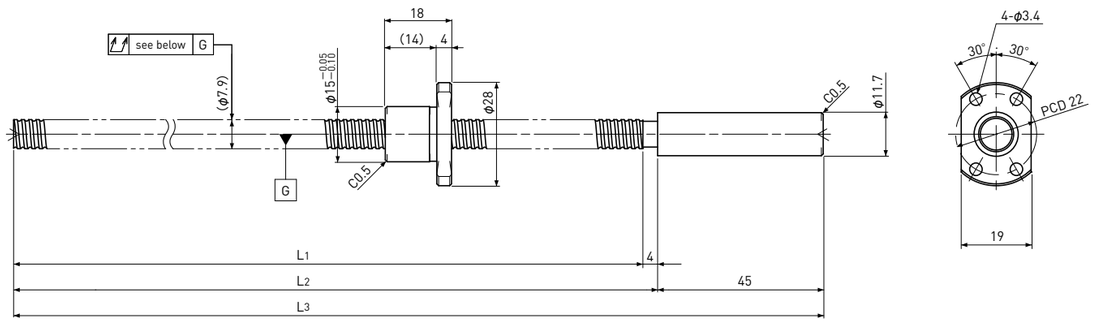

Unit :mm

Ball Screw Specifications		
Ball size		φ1.2
Number of thread		1
Thread direction		Right
Shaft root dia.		φ7.0
Number of circuit		1×3
Material	Shaft	S55C+SUS303
	Nut	SCM415H
Surface hardness		HRC58～ (Thread area)
Anti-rust treatment		Anti-rust oil

End-journal profile Supported-side

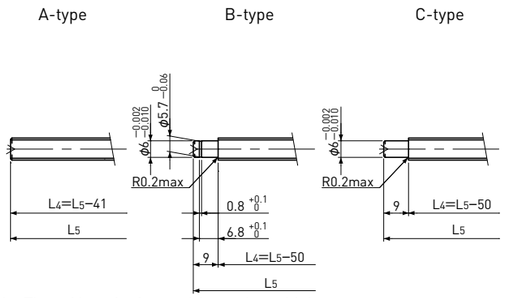

Fixed-side

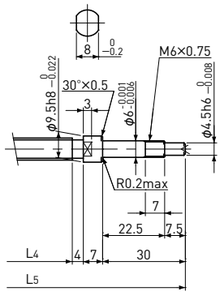

L4:Thread length after end-journal machining.
L5:Total length after end-journal machining.

Support-unit Recommendation		
Supported-side	:	MSU-6CS/6GS
Fixed-side	:	MSU-6C/6G

D-type : Other than the above.

Unit :mm

Ball Screw Model	Travel	Grade	Shaft length L1	Shaft length L2	Shaft length L3	Lead accuracy: Travel deviation e_p	Lead accuracy: Variation V_{300}	Total Run-out	Axial play	Preload Torque Nm	Basic Load Rating N: Dynamic Ca	Basic Load Rating N: Static Coa
SRT0802K-171R220C7	145	Ct7	171	175	220	±0.03	—	0.080	～0.020	—	1300	2300
SRT0802K-171R220C10	145	Ct10	171	175	220	±0.11	—	0.160	～0.050			

Note)Please refer to page A287 for order code of end-journal machining.

Standard products in stock SRT series

SRT0802.5 | Shaft dia. φ8 Lead 2.5mm | Ct7&Ct10

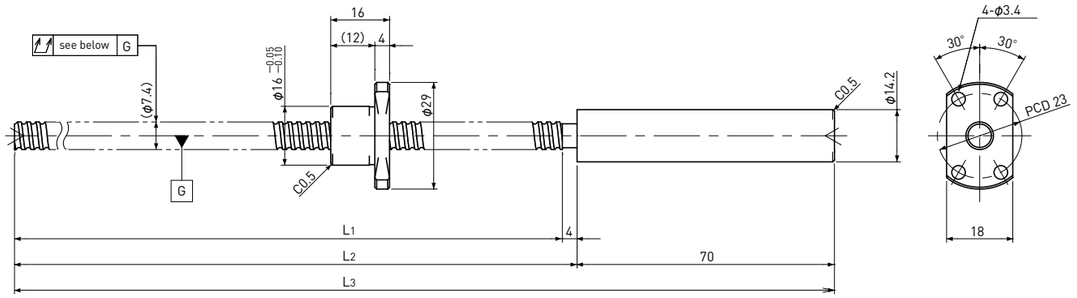

Unit :mm

Ball Screw Specifications		
Ball size		φ1.5875
Number of thread		1
Thread direction		Right
Shaft root dia.		φ6.3
Number of circuit		2.7×1
Material	Shaft	SCM415H+SUS303
	Nut	SCM415H
Surface hardness		HRC58～ (Thread area)
Anti-rust treatment		Anti-rust oil

End-journal profile Supported-side

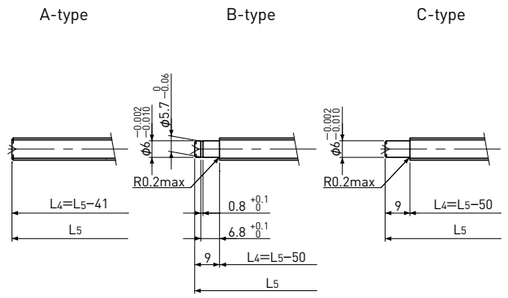

Fixed-side

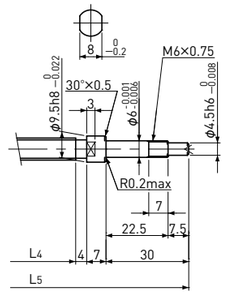

L4:Thread length after end-journal machining.
L5:Total length after end-journal machining.

Support-unit Recommendation		
Supported-side	:	MSU-6CS/6GS
Fixed-side	:	MSU-6C/6G

D-type : Other than the above.

Unit :mm

Ball Screw Model	Travel	Grade	Shaft length L1	Shaft length L2	Shaft length L3	Lead accuracy: Travel deviation e_p	Lead accuracy: Variation V_{300}	Total Run-out	Axial play	Preload Torque Nm	Basic Load Rating N: Dynamic Ca	Basic Load Rating N: Static Coa
SRT0802.5-196R270C7	180	Ct7	196	200	270	±0.03	—	0.080	～0.020	—	1850	3000
SRT0802.5-356R430C7	340	Ct7	356	360	430	±0.06	0.05	0.120				
SRT0802.5-196R270C10	180	Ct10	196	200	270	±0.13	—	0.160	～0.050			
SRT0802.5-356R430C10	340	Ct10	356	360	430	±0.24	0.21	0.240				

Note)Please refer to page A287 for order code of end-journal machining.

Standard products in stock SRT series

SRT0805 | Shaft dia. φ8 Lead 5mm | Ct7&Ct10

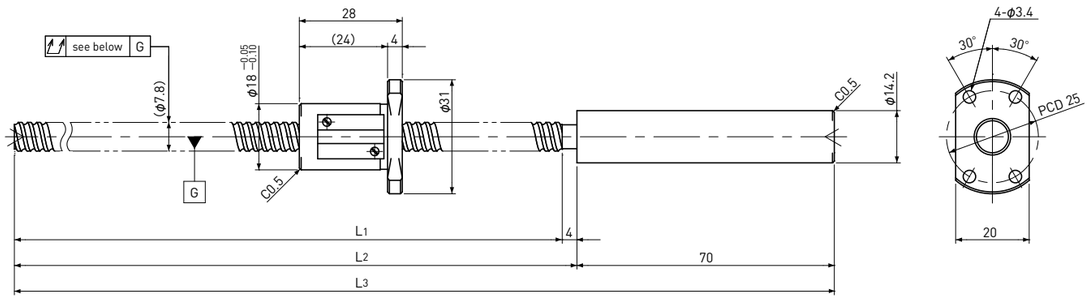

Unit :mm

Ball Screw Specifications		
Ball size		φ1.5875
Number of thread		1
Thread direction		Right
Shaft root dia.		φ6.6
Number of circuit		2.7×1
Material	Shaft	SCM415H+SUS303
	Nut	SCM415H
Surface hardness		HRC58～ (Thread area)
Anti-rust treatment		Anti-rust oil

End-journal profile Supported-side

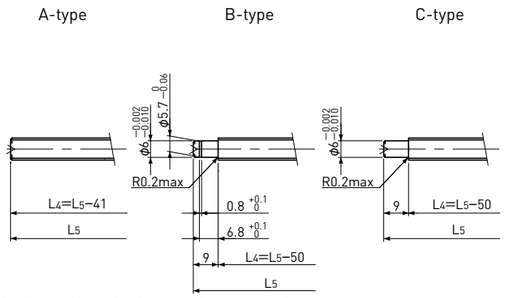

L4:Thread length after end-journal machining.
L5:Total length after end-journal machining.

Fixed-side

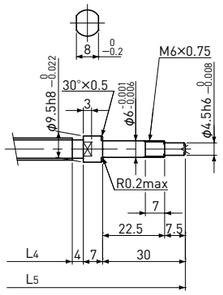

Support-unit Recommendation		
Supported-side	:	MSU-6CS/6GS
Fixed-side	:	MSU-6C/6G

D-type : Other than the above.

Unit :mm

Ball Screw Model	Travel	Grade	Shaft length L1	Shaft length L2	Shaft length L3	Lead accuracy: Travel deviation e_p	Lead accuracy: Variation V_{300}	Total Run-out	Axial play	Preload Torque Nm	Basic Load Rating N: Dynamic Ca	Basic Load Rating N: Static Coa
SRT0805-196R270C7	165	Ct7	196	200	270	±0.03	—	0.080	～0.020	—	1850	3000
SRT0805-356R430C7	325	Ct7	356	360	430	±0.06	0.05	0.120				
SRT0805-196R270C10	165	Ct10	196	200	270	±0.13	—	0.160	～0.050			
SRT0805-356R430C10	325	Ct10	356	360	430	±0.24	0.21	0.240				

Note)Please refer to page A287 for order code of end-journal machining.

Standard products in stock SRT series

SRT0808 | Shaft dia. φ8 Lead 8mm | Ct7&Ct10

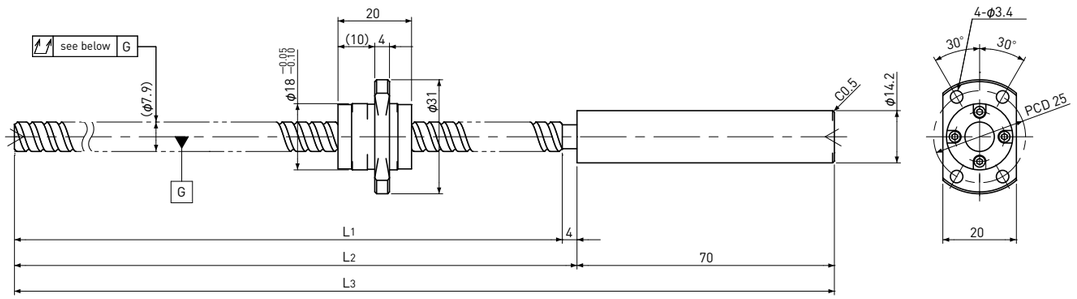

Unit :mm

Ball Screw Specifications		
Ball size		φ1.5875
Number of thread		2
Thread direction		Right
Shaft root dia.		φ6.7
Number of circuit		1.6×2
Material	Shaft	SCM415H+SUS303
	Nut	SCM415H
Surface hardness		HRC58～ (Thread area)
Anti-rust treatment		Anti-rust oil

End-journal profile Supported-side

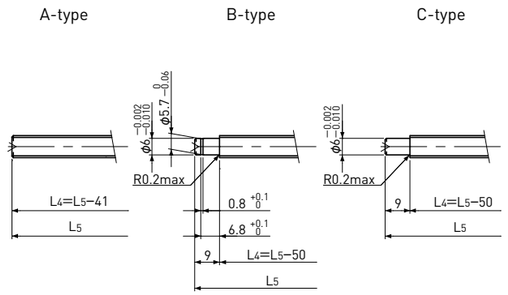

L4:Thread length after end-journal machining.
L5:Total length after end-journal machining.

Fixed-side

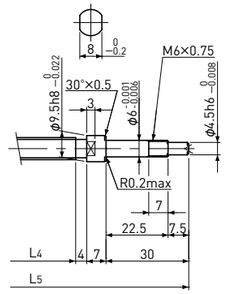

Support-unit Recommendation		
Supported-side	:	MSU-6CS/6GS
Fixed-side	:	MSU-6C/6G

D-type : Other than the above.

Unit :mm

Ball Screw Model	Travel	Grade	Shaft length L1	Shaft length L2	Shaft length L3	Lead accuracy: Travel deviation e_p	Lead accuracy: Variation V_{300}	Total Run-out	Axial play	Preload Torque Nm	Basic Load Rating N: Dynamic Ca	Basic Load Rating N: Static Coa
SRT0808-196R270C7	175	Ct7	196	200	270	±0.03	—	0.080	～0.020	—	2200	3800
SRT0808-356R430C7	335	Ct7	356	360	430	±0.06	0.05	0.120				
SRT0808-196R270C10	175	Ct10	196	200	270	±0.13	—	0.160	～0.050			
SRT0808-356R430C10	335	Ct10	356	360	430	±0.24	0.21	0.240				

Note)Please refer to page A287 for order code of end-journal machining.

Standard products in stock SRT series

SRT0812 | Shaft dia. φ8 Lead 12mm | Ct7&Ct10

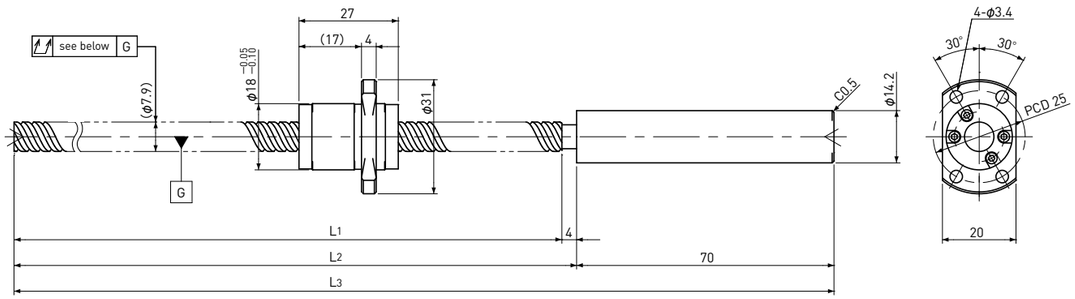

Unit :mm

Ball Screw Specifications		
Ball size		φ1.5875
Number of thread		2
Thread direction		Right
Shaft root dia.		φ6.7
Number of circuit		1.6×2
Material	Shaft	SCM415H+SUS303
	Nut	SCM415H
Surface hardness		HRC58～ (Thread area)
Anti-rust treatment		Anti-rust oil

End-journal profile Supported-side

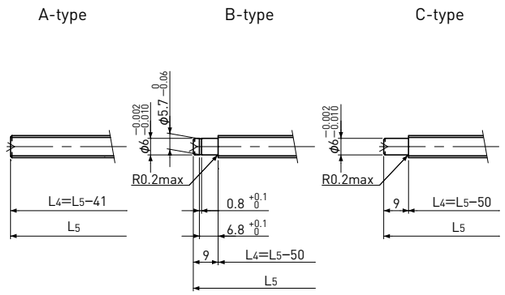

Fixed-side

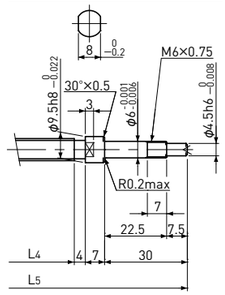

L4:Thread length after end-journal machining.
L5:Total length after end-journal machining.

Support-unit Recommendation		
Supported-side	:	MSU-6CS/6GS
Fixed-side	:	MSU-6C/6G

D-type : Other than the above.

Unit :mm

Ball Screw Model	Travel	Grade	Shaft length L1	Shaft length L2	Shaft length L3	Lead accuracy: Travel deviation ep	Lead accuracy: Variation V300	Total Run-out	Axial play	Preload Torque Nm	Basic Load Rating N: Dynamic Ca	Basic Load Rating N: Static Coa
SRT0812-196R270C7	165	Ct7	196	200	270	±0.03	—	0.080	～0.020	—	2200	4000
SRT0812-356R430C7	325	Ct7	356	360	430	±0.06	0.05	0.120				
SRT0812-196R270C10	165	Ct10	196	200	270	±0.13	—	0.160	～0.050			
SRT0812-356R430C10	325	Ct10	356	360	430	±0.24	0.21	0.240				

Note)Please refer to page A287 for order code of end-journal machining.

Standard products in stock SRT series

SRT1002 | Shaft dia. φ10 Lead 2mm | Ct7&Ct10

＊Please refer to page A318 for stainless steel type.

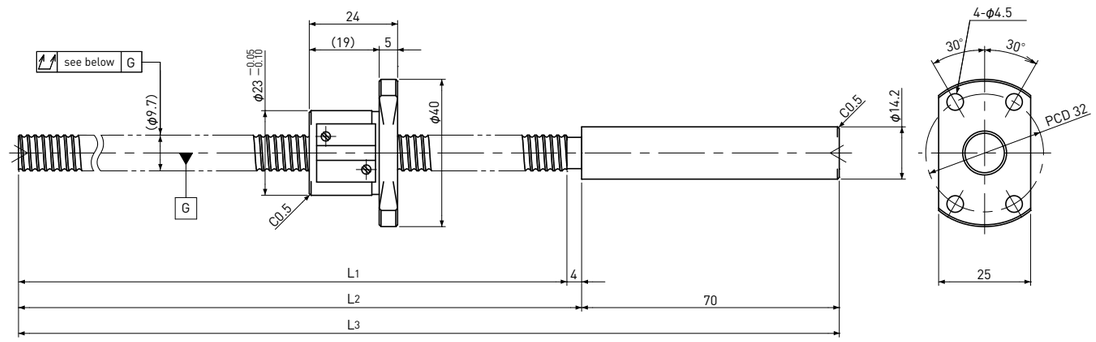

Unit :mm

Ball Screw Specifications		
Ball size		φ1.5875
Number of thread		1
Thread direction		Right
Shaft root dia.		φ8.6
Number of circuit		3.7×1
Material	Shaft	SCM415H+SUS303
	Nut	SCM415H
Surface hardness		HRC58～ (Thread area)
Anti-rust treatment		Anti-rust oil

End-journal profile Supported-side

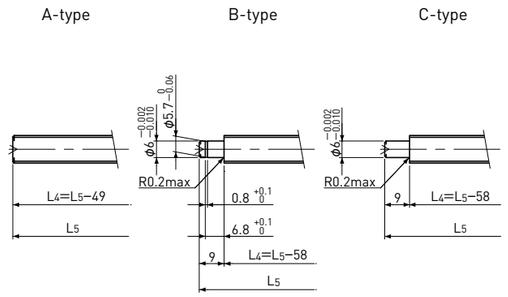

Fixed-side

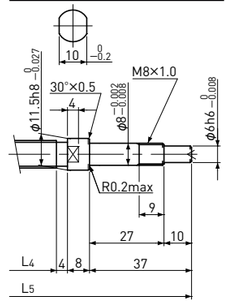

L4:Thread length after end-journal machining.
L5:Total length after end-journal machining.

Support-unit Recommendation		
Supported-side	:	MSU-8CS/8GS
Fixed-side	:	MSU-8C/8G

D-type : Other than the above.

Unit :mm

Ball Screw Model	Travel	Grade	Shaft length L1	Shaft length L2	Shaft length L3	Lead accuracy: Travel deviation ep	Lead accuracy: Variation V300	Total Run-out	Axial play	Preload Torque Nm	Basic Load Rating N: Dynamic Ca	Basic Load Rating N: Static Coa
SRT1002-196R270C7	170	Ct7	196	200	270	±0.03	—	0.080	～0.020	—	2700	5300
SRT1002-396R470C7	370	Ct7	396	400	470	±0.06	0.05	0.120				
SRT1002-196R270C10	170	Ct10	196	200	270	±0.13	—	0.160	～0.050			
SRT1002-396R470C10	370	Ct10	396	400	470	±0.27	0.21	0.240				

Note)Please refer to page A287 for order code of end-journal machining.

Standard products in stock SRT series

SRT1002K | Compact Nut | Shaft dia. φ10 Lead 2mm | Ct7&Ct10

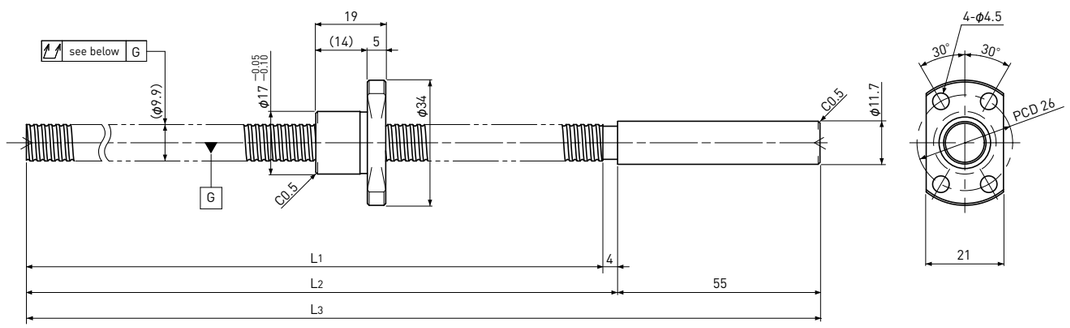

Unit :mm

Ball Screw Specifications		
Ball size		φ1.2
Number of thread		1
Thread direction		Right
Shaft root dia.		φ9.0
Number of circuit		1×3
Material	Shaft	S55C+SUS303
	Nut	SCM415H
Surface hardness		HRC58～ (Thread area)
Anti-rust treatment		Anti-rust oil

End-journal profile Supported-side

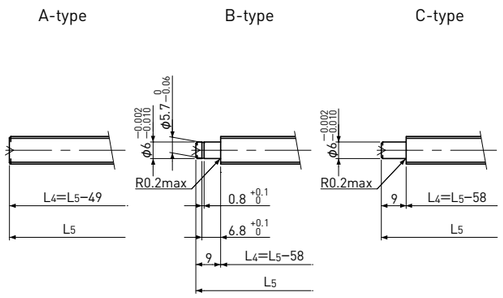

Fixed-side

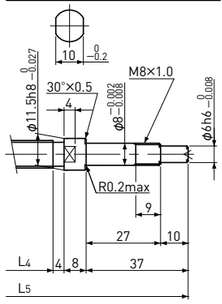

L4:Thread length after end-journal machining.
L5:Total length after end-journal machining.

Support-unit Recommendation		
Supported-side	:	MSU-8CS/8GS
Fixed-side	:	MSU-8C/8G

D-type : Other than the above.

Unit :mm

Ball Screw Model	Travel	Grade	Shaft length			Lead accuracy		Total Run-out	Axial play	Preload Torque Nm	Basic Load Rating N	
			L1	L2	L3	Travel deviation ep	Variation V300				Dynamic Ca	Static Coa
SRT1002K-201R260C7	175	Ct7	201	205	260	±0.03	—	0.080	～0.020	—	1450	3000
SRT1002K-201R260C10	175	Ct10	201	205	260	±0.14	—	0.160	～0.050			

Note)Please refer to page A287 for order code of end-journal machining.

Standard products in stock SRT series

SRT1005 | Shaft dia. φ10 Lead 5mm | Ct7&Ct10

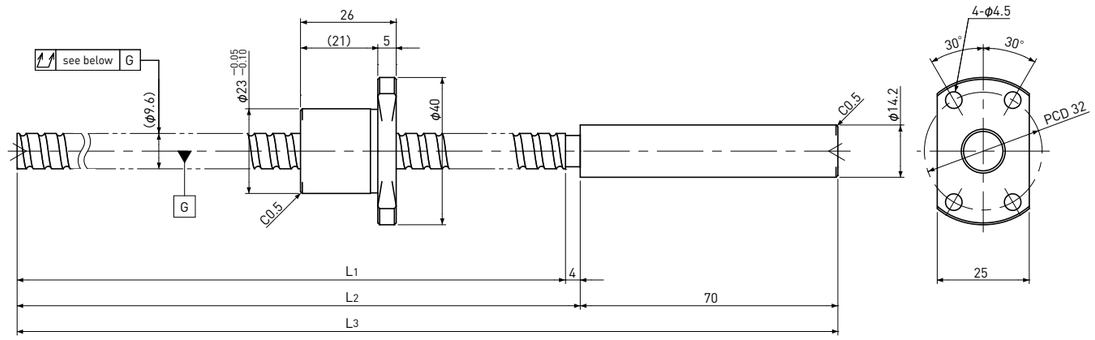

Unit :mm

Ball Screw Specifications		
Ball size		φ2.0
Number of thread		1
Thread direction		Right
Shaft root dia.		φ8.2
Number of circuit		2.7×1
Material	Shaft	SCM415H+SUS303
	Nut	SCM415H
Surface hardness		HRC58～ (Thread area)
Anti-rust treatment		Anti-rust oil

End-journal profile Supported-side

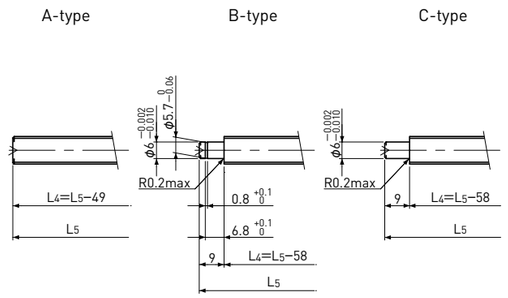

Fixed-side

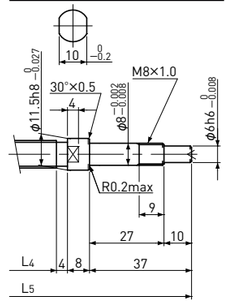

L4:Thread length after end-journal machining.
L5:Total length after end-journal machining.

Support-unit Recommendation		
Supported-side	:	MSU-8CS/8GS
Fixed-side	:	MSU-8C/8G

D-type : Other than the above.

Unit :mm

Ball Screw Model	Travel	Grade	Shaft length			Lead accuracy		Total Run-out	Axial play	Preload Torque Nm	Basic Load Rating N	
			L1	L2	L3	Travel deviation ep	Variation V300				Dynamic Ca	Static Coa
SRT1005-196R270C7	170	Ct7	196	200	270	±0.03	—	0.080	～0.020	—	3000	5200
SRT1005-396R470C7	370	Ct7	396	400	470	±0.06	0.05	0.120				
SRT1005-196R270C10	170	Ct10	196	200	270	±0.13	—	0.160	～0.050			
SRT1005-396R470C10	370	Ct10	396	400	470	±0.27	0.21	0.240				

Note)Please refer to page A287 for order code of end-journal machining.

Standard products in stock SRT series

SRT1010 | Shaft dia. φ10 Lead 10mm | Ct7&Ct10

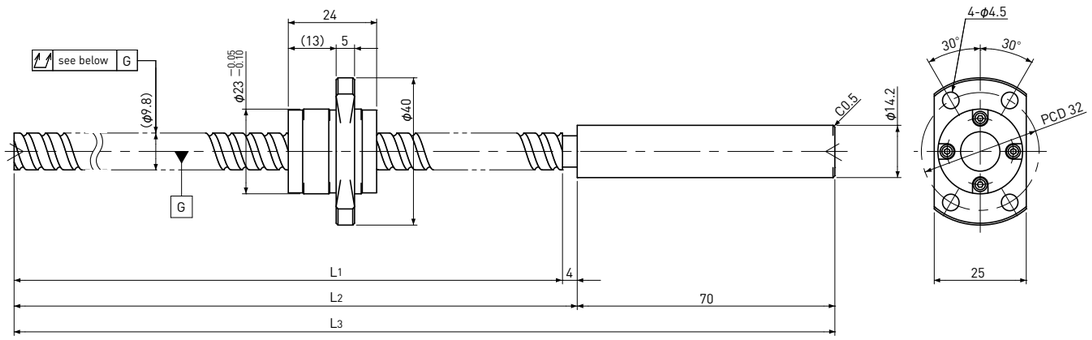

Unit :mm

Ball Screw Specifications		
Ball size		φ2.0
Number of thread		2
Thread direction		Right
Shaft root dia.		φ8.4
Number of circuit		1.6×2
Material	Shaft	SCM415H+SUS303
	Nut	SCM415H
Surface hardness		HRC58～ (Thread area)
Anti-rust treatment		Anti-rust oil

End-journal profile Supported-side

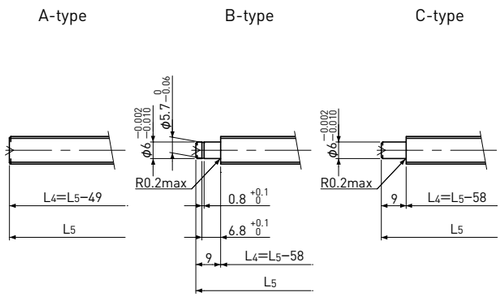

Fixed-side

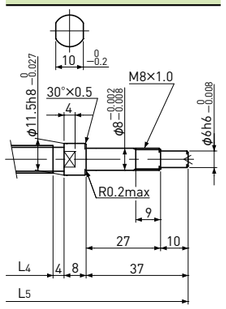

L4:Thread length after end-journal machining.
L5:Total length after end-journal machining.

Support-unit Recommendation		
Supported-side	:	MSU-8CS/8GS
Fixed-side	:	MSU-8C/8G

D-type : Other than the above.

Unit :mm

Ball Screw Model	Travel	Grade	Shaft length			Lead accuracy		Total Run-out	Axial play	Preload Torque Nm	Basic Load Rating N	
			L_1	L_2	L_3	Travel deviation e_p	Variation V_{300}				Dynamic Ca	Static Coa
SRT1010-196R270C7	170	Ct7	196	200	270	±0.03	—	0.080	～0.020	—	3300	5900
SRT1010-396R470C7	370	Ct7	396	400	470	±0.06	0.05	0.120				
SRT1010-196R270C10	170	Ct10	196	200	270	±0.13	—	0.160	～0.050			
SRT1010-396R470C10	370	Ct10	396	400	470	±0.27	0.21	0.240				

Note)Please refer to page A287 for order code of end-journal machining.

Standard products in stock SRT series

SRT1015 | Shaft dia. φ10 Lead 15mm | Ct7&Ct10

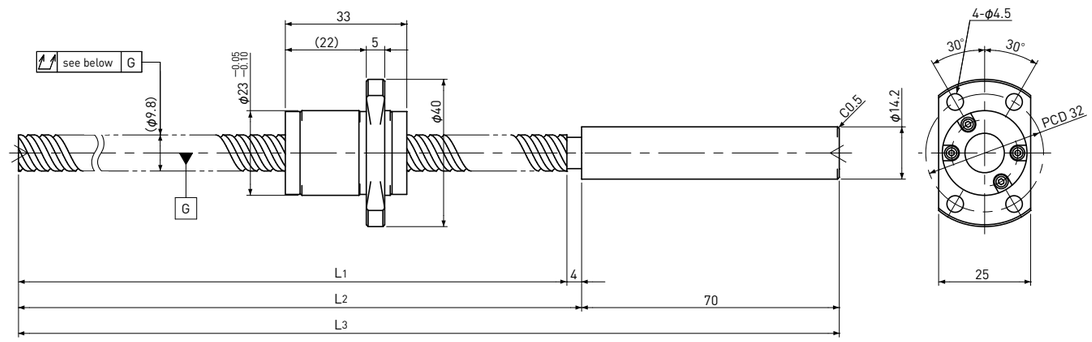

Unit :mm

Ball Screw Specifications		
Ball size		φ2.0
Number of thread		2
Thread direction		Right
Shaft root dia.		φ8.4
Number of circuit		1.6×2
Material	Shaft	SCM415H+SUS303
	Nut	SCM415H
Surface hardness		HRC58～ (Thread area)
Anti-rust treatment		Anti-rust oil

End-journal profile Supported-side

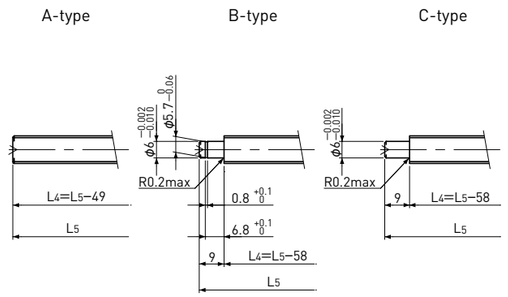

Fixed-side

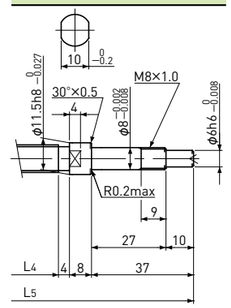

L4:Thread length after end-journal machining.
L5:Total length after end-journal machining.

Support-unit Recommendation		
Supported-side	:	MSU-8CS/8GS
Fixed-side	:	MSU-8C/8G

D-type : Other than the above.

Unit :mm

Ball Screw Model	Travel	Grade	Shaft length			Lead accuracy		Total Run-out	Axial play	Preload Torque Nm	Basic Load Rating N	
			L_1	L_2	L_3	Travel deviation e_p	Variation V_{300}				Dynamic Ca	Static Coa
SRT1015-196R270C7	160	Ct7	196	200	270	±0.03	—	0.080	～0.020	—	3300	6400
SRT1015-396R470C7	360	Ct7	396	400	470	±0.06	0.05	0.120				
SRT1015-196R270C10	160	Ct10	196	200	270	±0.13	—	0.160	～0.050			
SRT1015-396R470C10	360	Ct10	396	400	470	±0.27	0.21	0.240				

Note)Please refer to page A287 for order code of end-journal machining.

Standard products in stock SRT series

SRT1020 | Shaft dia. φ10 Lead 20mm | Ct7&Ct10

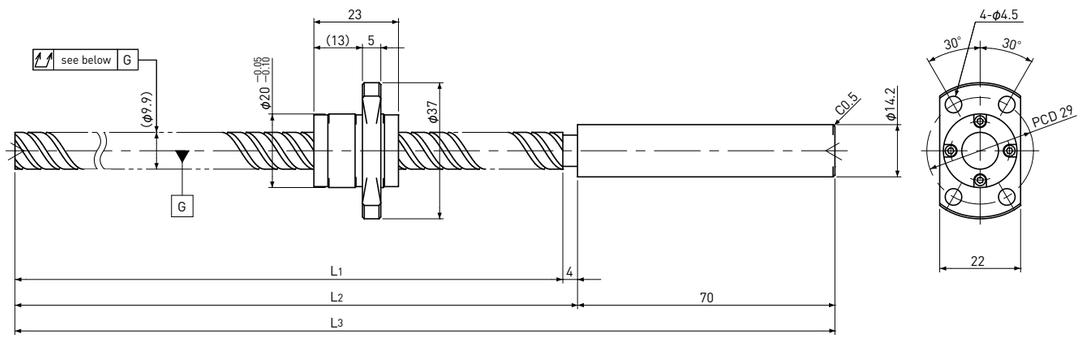

Unit :mm

Ball Screw Specifications		
Ball size		φ1.5875
Number of thread		4
Thread direction		Right
Shaft root dia.		φ8.7
Number of circuit		0.7×4
Material	Shaft	SCM415H+SUS303
	Nut	SCM415H
Surface hardness		HRC58～ (Thread area)
Anti-rust treatment		Anti-rust oil

End-journal profile Supported-side

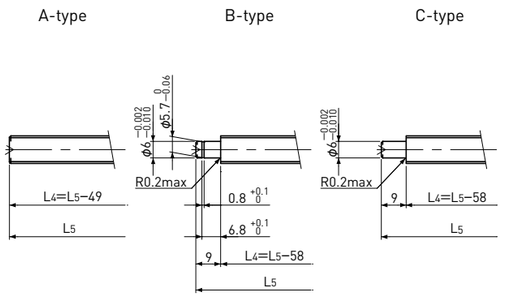

Fixed-side

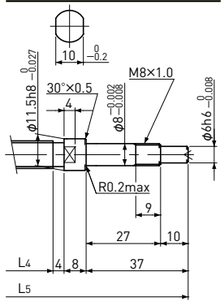

L4:Thread length after end-journal machining.
L5:Total length after end-journal machining.

Support-unit Recommendation		
Supported-side	:	MSU-8CS/8GS
Fixed-side	:	MSU-8C/8G

D-type : Other than the above.

Unit :mm

Ball Screw Model	Travel	Grade	Shaft length L1	Shaft length L2	Shaft length L3	Lead accuracy: Travel deviation e_p	Lead accuracy: Variation V_{300}	Total Run-out	Axial play	Preload Torque Nm	Basic Load Rating N: Dynamic Ca	Basic Load Rating N: Static Coa
SRT1020-196R270C7	170	Ct7	196	200	270	±0.03	—	0.080	～0.020	—	2100	4000
SRT1020-396R470C7	370	Ct7	396	400	470	±0.06	0.05	0.120				
SRT1020-196R270C10	170	Ct10	196	200	270	±0.13	—	0.160	～0.050			
SRT1020-396R470C10	370	Ct10	396	400	470	±0.27	0.21	0.240				

Note)Please refer to page A287 for order code of end-journal machining.

Standard products in stock SRT series

SRT1202 | Shaft dia. φ12 Lead 2mm | Ct7&Ct10

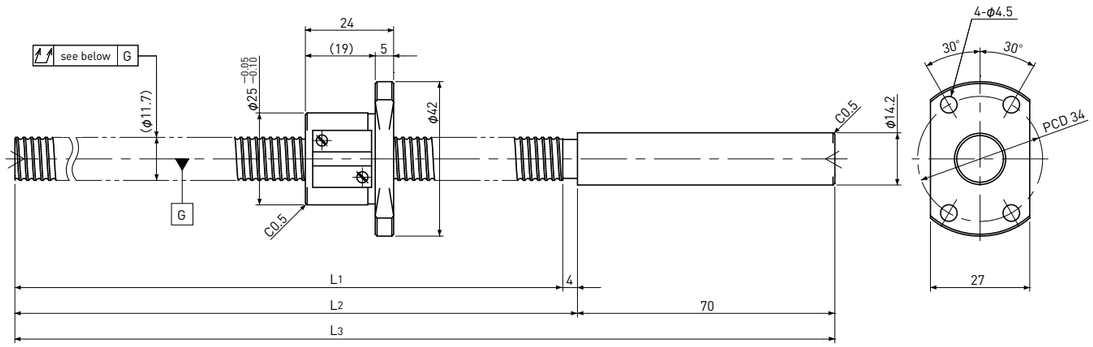

Unit :mm

Ball Screw Specifications		
Ball size		φ1.5875
Number of thread		1
Thread direction		Right
Shaft root dia.		φ10.6
Number of circuit		3.7×1
Material	Shaft	SCM415H+SUS303
	Nut	SCM415H
Surface hardness		HRC58～ (Thread area)
Anti-rust treatment		Anti-rust oil

End-journal profile Supported-side

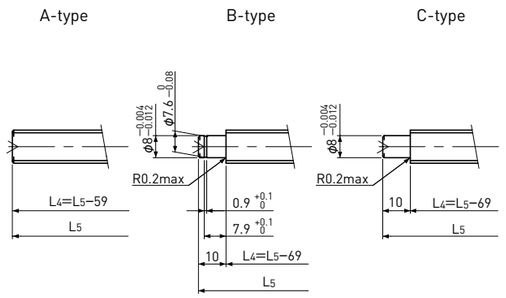

Fixed-side

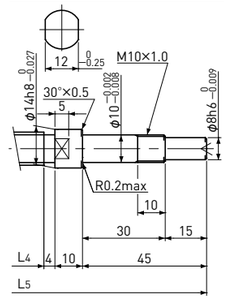

L4:Thread length after end-journal machining.
L5:Total length after end-journal machining.

Support-unit Recommendation		
Supported-side	:	—
Fixed-side	:	—

D-type : Other than the above.

Unit :mm

Ball Screw Model	Travel	Grade	Shaft length L1	Shaft length L2	Shaft length L3	Lead accuracy: Travel deviation e_p	Lead accuracy: Variation V_{300}	Total Run-out	Axial play	Preload Torque Nm	Basic Load Rating N: Dynamic Ca	Basic Load Rating N: Static Coa
SRT1202-196R270C7	170	Ct7	196	200	270	±0.03	—	0.080	～0.020	—	3000	6400
SRT1202-396R470C7	370	Ct7	396	400	470	±0.06	0.05	0.080				
SRT1202-196R270C10	170	Ct10	196	200	270	±0.13	—	0.160	～0.050			
SRT1202-396R470C10	370	Ct10	396	400	470	±0.27	0.21	0.160				

Note)Please refer to page A287 for order code of end-journal machining.

Standard products in stock SRT series

SRT1202K | Compact Nut Shaft dia. φ12 Lead 2mm | Ct7&Ct10

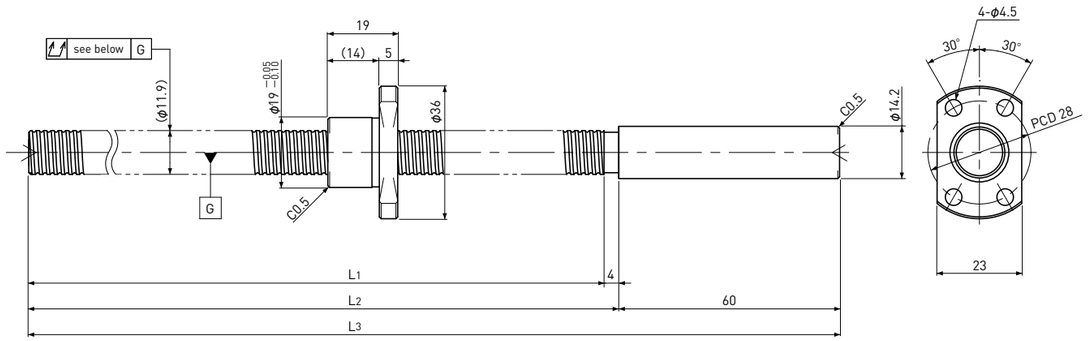

Unit :mm

Ball Screw Specifications		
Ball size		φ1.2
Number of thread		1
Thread direction		Right
Shaft root dia.		φ11.0
Number of circuit		1×3
Material	Shaft	S55C+SUS303
	Nut	SCM415H
Surface hardness		HRC58～ (Thread area)
Anti-rust treatment		Anti-rust oil

End-journal profile Supported-side

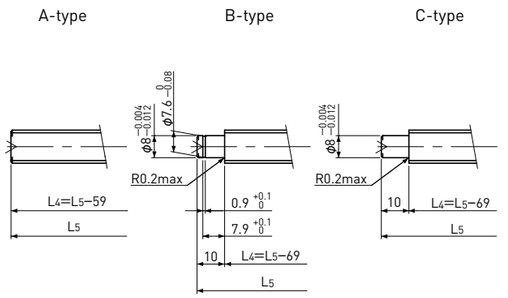

Fixed-side

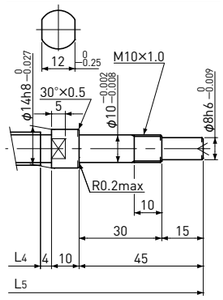

L4:Thread length after end-journal machining.
L5:Total length after end-journal machining.

Support-unit Recommendation	Supported-side : —
	Fixed-side : —

D-type : Other than the above.

Unit :mm

Ball Screw Model	Travel	Grade	Shaft length L1	Shaft length L2	Shaft length L3	Lead accuracy: Travel deviation e_p	Lead accuracy: Variation V_{300}	Total Run-out	Axial play	Preload Torque Nm	Basic Load Rating N: Dynamic Ca	Basic Load Rating N: Static Coa
SRT1202K-271R335C7	245	Ct7	271	275	335	±0.04	—	0.080	～0.020	—	1600	3700
SRT1202K-271R335C10	245	Ct10	271	275	335	±0.19	—	0.160	～0.050			

Note)Please refer to page A287 for order code of end-journal machining.

Standard products in stock SRT series

SRT1210 | Shaft dia. φ12 Lead 10mm | Ct7&Ct10

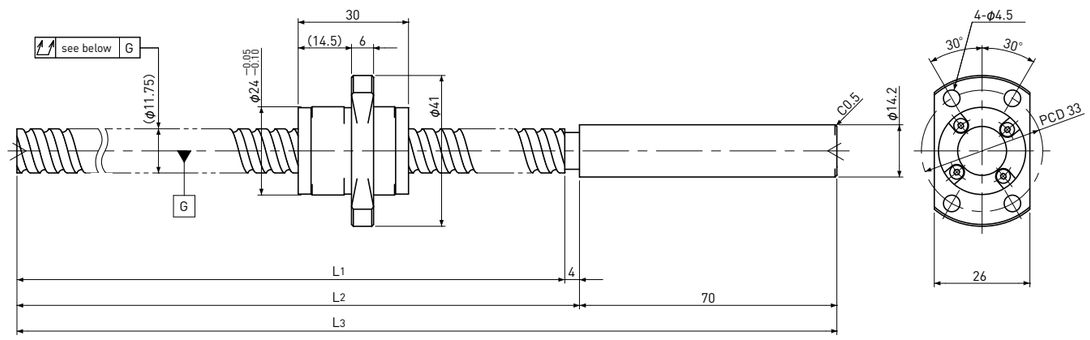

Unit :mm

Ball Screw Specifications		
Ball size		φ2.381
Number of thread		2
Thread direction		Right
Shaft root dia.		φ10.2
Number of circuit		1.7×2
Material	Shaft	SCM415H+SUS303
	Nut	SCM415H
Surface hardness		HRC58～ (Thread area)
Anti-rust treatment		Anti-rust oil

End-journal profile Supported-side

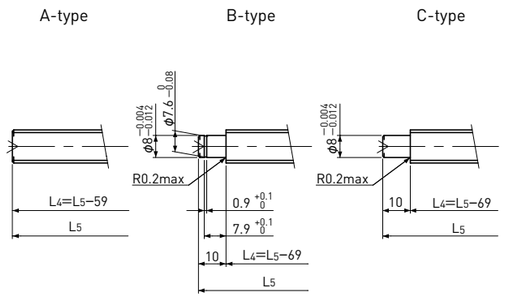

Fixed-side

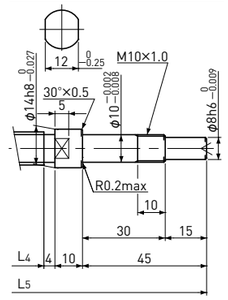

L4:Thread length after end-journal machining.
L5:Total length after end-journal machining.

Support-unit Recommendation	Supported-side : —
	Fixed-side : —

D-type : Other than the above.

Unit :mm

Ball Screw Model	Travel	Grade	Shaft length L1	Shaft length L2	Shaft length L3	Lead accuracy: Travel deviation e_p	Lead accuracy: Variation V_{300}	Total Run-out	Axial play	Preload Torque Nm	Basic Load Rating N: Dynamic Ca	Basic Load Rating N: Static Coa
SRT1210-196R270C7	165	Ct7	196	200	270	±0.03	—	0.080	～0.020	—	5100	9800
SRT1210-396R470C7	365	Ct7	396	400	470	±0.06	0.05	0.080				
SRT1210-196R270C10	165	Ct10	196	200	270	±0.13	—	0.160	～0.050			
SRT1210-396R470C10	365	Ct10	396	400	470	±0.27	0.21	0.160				

Note)Please refer to page A287 for order code of end-journal machining.

Standard products in stock SSRT series

SSRT0601 | Stainless Shaft dia.φ6 Lead 1mm | Ct7&Ct10

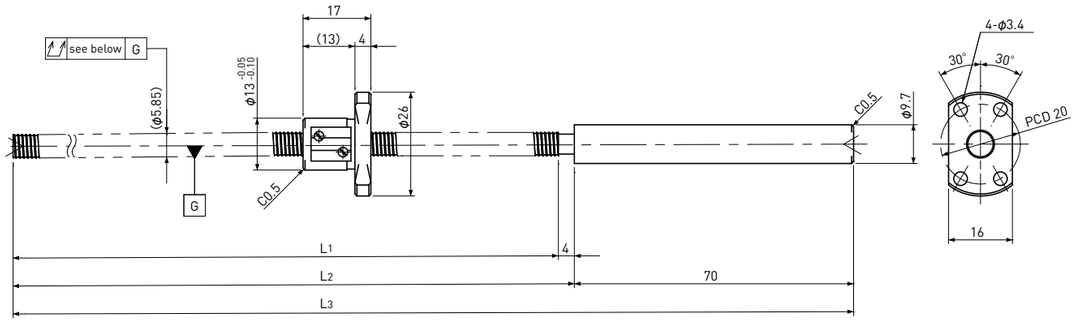

Unit :mm

Ball Screw Specifications		
Ball size		φ0.8
Number of thread		1
Thread direction		Right
Shaft root dia		φ5.3
Number of circuit		3.7×1
Material	Shaft	SUS440C+SUS303
	Nut	SUS440C
Surface hardness		HRC55～ (Thread area)
Anti-rust treatment		Anti-rust oil

End-journal profile Supported-side

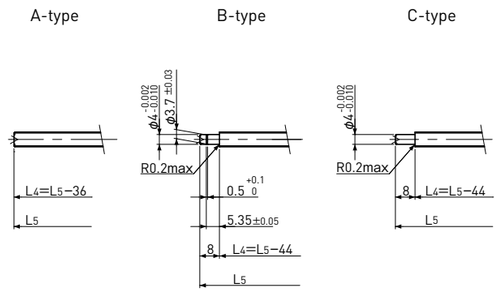

Fixed-side

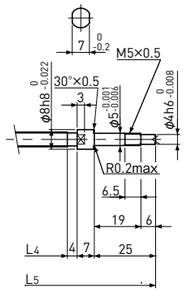

L4:Thread length after end-journal machining.
L5:Total length after end-journal machining.

Support-unit Recommendation		
Supported-side	:	MSU-5CS/5GS
Fixed-side	:	MSU-5C/5G

D-type : Other than the above.

Unit :mm

Ball Screw Model	Travel	Grade	Shaft length L1	L2	L3	Lead accuracy Travel deviation ep	Variation V300	Total Run-out	Axial play	Preload Torque Nm	Basic Load Rating N Dynamic Ca	Static Coa
SSRT0601-146R220C7	125	Ct7	146	150	220	±0.02	—	0.080	～0.020	—	560	900
SSRT0601-261R335C7	240	Ct7	261	265	335	±0.04	—	0.120				
SSRT0601-146R220C10	125	Ct10	146	150	220	±0.10	—	0.160	～0.050			
SSRT0601-261R335C10	240	Ct10	261	265	335	±0.18	—	0.240				

Note)Please refer to page A287 for order code of end-journal machining.

Standard products in stock SSRT series

SSRT0801 | Stainless Shaft dia.φ8 Lead 1mm | Ct7&Ct10

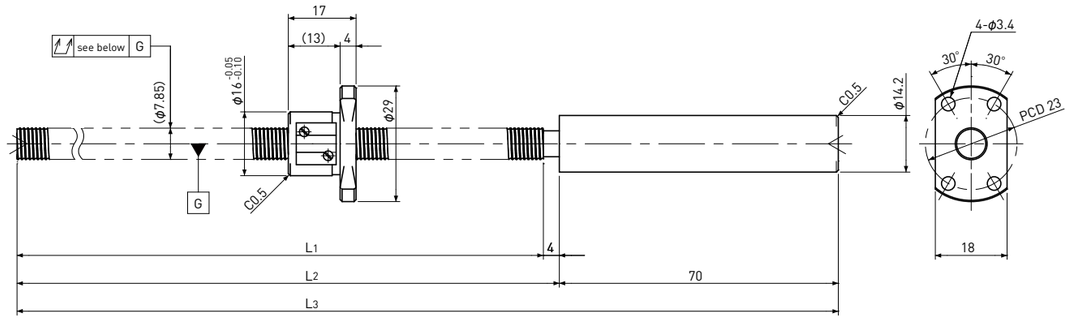

Unit :mm

Ball Screw Specifications		
Ball size		φ0.8
Number of thread		1
Thread direction		Right
Shaft root dia		φ7.3
Number of circuit		3.7×1
Material	Shaft	SUS440C+SUS303
	Nut	SUS440C
Surface hardness		HRC55～ (Thread area)
Anti-rust treatment		Anti-rust oil

End-journal profile Supported-side

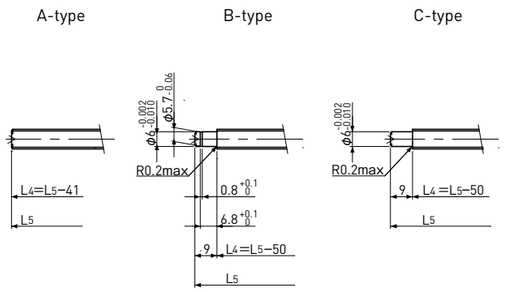

Fixed-side

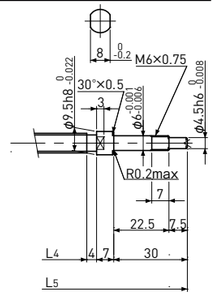

L4:Thread length after end-journal machining.
L5:Total length after end-journal machining.

Support-unit Recommendation		
Supported-side	:	MSU-6CS/6GS
Fixed-side	:	MSU-6C/6G

D-type : Other than the above.

Unit :mm

Ball Screw Model	Travel	Grade	Shaft length L1	L2	L3	Lead accuracy Travel deviation ep	Variation V300	Total Run-out	Axial play	Preload Torque Nm	Basic Load Rating N Dynamic Ca	Static Coa
SSRT0801-196R270C7	175	Ct7	196	200	270	±0.03	—	0.080	～0.020	—	630	1250
SSRT0801-356R430C7	335	Ct7	356	360	430	±0.06	0.05	0.120				
SSRT0801-196R270C10	175	Ct10	196	200	270	±0.13	—	0.160	～0.050			
SSRT0801-356R430C10	335	Ct10	356	360	430	±0.24	0.21	0.240				

Note)Please refer to page A287 for order code of end-journal machining.

Standard products in stock SSRT series

SSRT0802 | Stainless Shaft dia.φ8 Lead 2mm | Ct7&Ct10

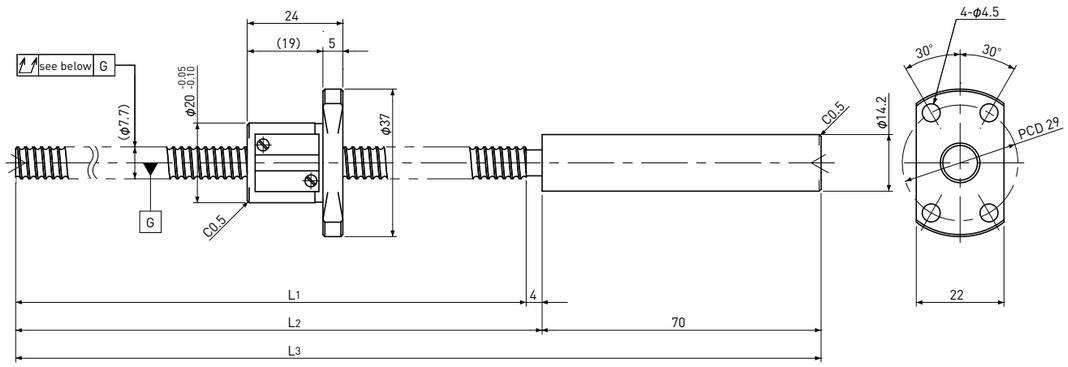

Unit :mm

Ball Screw Specifications		
Ball size		φ1.5875
Number of thread		1
Thread direction		Right
Shaft root dia		φ6.6
Number of circuit		3.7×1
Material	Shaft	SUS440C+SUS303
	Nut	SUS440C
Surface hardness		HRC55～ (Thread area)
Anti-rust treatment		Anti-rust oil

End-journal profile Supported-side

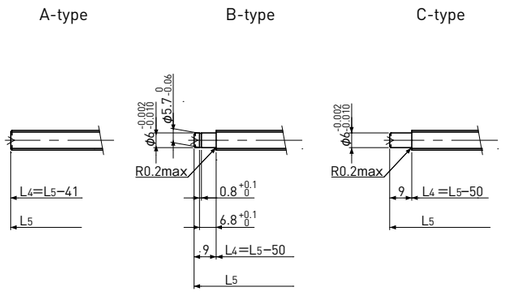

Fixed-side

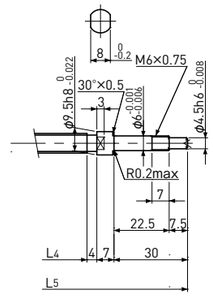

L4:Thread length after end-journal machining.
L5:Total length after end-journal machining.

Support-unit Recommendation		
Supported-side	:	MSU-6CS/6GS
Fixed-side	:	MSU-6C/6G

D-type : Other than the above.

Unit :mm

Ball Screw Model	Travel	Grade	Shaft length L1	Shaft length L2	Shaft length L3	Lead accuracy: Travel deviation ep	Lead accuracy: Variation V300	Total Run-out	Axial play	Preload Torque Nm	Basic Load Rating N: Dynamic Ca	Basic Load Rating N: Static Coa
SSRT0802-196R270C7	170	Ct7	196	200	270	±0.03	—	0.080	～0.020	—	1950	3100
SSRT0802-356R430C7	330	Ct7	356	360	430	±0.06	0.05	0.120				
SSRT0802-196R270C10	170	Ct10	196	200	270	±0.13	—	0.160	～0.050			
SSRT0802-356R430C10	330	Ct10	356	360	430	±0.24	0.21	0.240				

Note)Please refer to page A287 for order code of end-journal machining.

Standard products in stock SSRT series

SSRT1002 | Stainless Shaft dia.φ10 Lead 2mm | Ct7&Ct10

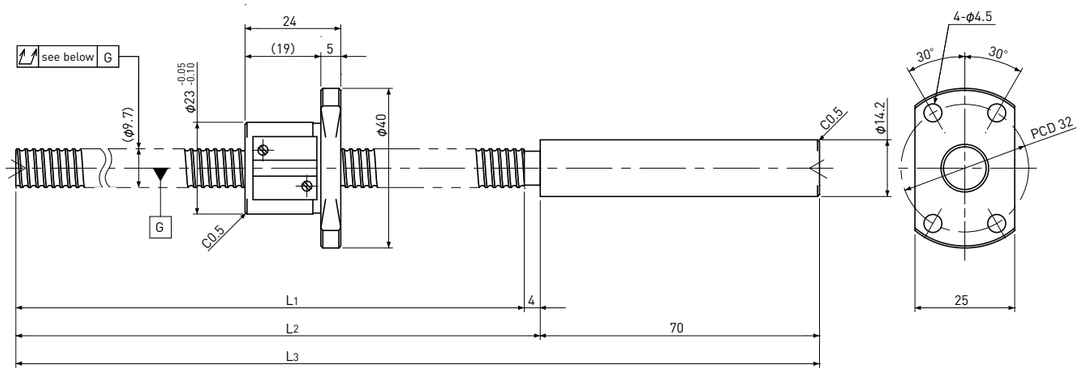

Unit :mm

Ball Screw Specifications		
Ball size		φ1.5875
Number of thread		1
Thread direction		Right
Shaft root dia		φ8.6
Number of circuit		3.7×1
Material	Shaft	SUS440C+SUS303
	Nut	SUS440C
Surface hardness		HRC55～ (Thread area)
Anti-rust treatment		Anti-rust oil

End-journal profile Supported-side

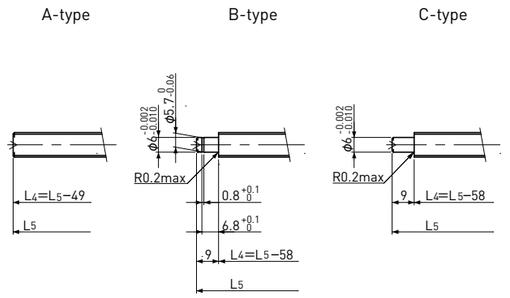

Fixed-side

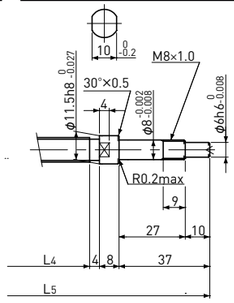

L4:Thread length after end-journal machining.
L5:Total length after end-journal machining.

Support-unit Recommendation		
Supported-side	:	MSU-8CS/8GS
Fixed-side	:	MSU-8C/8G

D-type : Other than the above.

Unit :mm

Ball Screw Model	Travel	Grade	Shaft length L1	Shaft length L2	Shaft length L3	Lead accuracy: Travel deviation ep	Lead accuracy: Variation V300	Total Run-out	Axial play	Preload Torque Nm	Basic Load Rating N: Dynamic Ca	Basic Load Rating N: Static Coa
SSRT1002-196R270C7	170	Ct7	196	200	270	±0.03	—	0.080	～0.020	—	2200	4000
SSRT1002-396R470C7	370	Ct7	396	400	470	±0.06	0.05	0.120				
SSRT1002-196R270C10	170	Ct10	196	200	270	±0.13	—	0.160	～0.050			
SSRT1002-396R470C10	370	Ct10	396	400	470	±0.27	0.21	0.240				

Note)Please refer to page A287 for order code of end-journal machining.

PSR/PSRT series　Precision Rolled Ball Screws

High accuracy(JIS C5) has been achieved by Rolled Ball Screw. We provide Rolled Ball Screws with high precision & better cost performance, which can be replaced with conventional Ground Ball Screw with C5 grade.

●Features

- The conventional type of Rolled Ball Screws can reach the Accuracy grade of Ct10 or Ct7. KSS newly developed the high grade accuracy of Rolled Ball Screw, which can achieve JIS C5 grade.
- We have 2 types of Precision Rolled Ball Screws, which are Integrated type with larger journal and whole threaded type. So it provides wide variety of design choices.
- For Integrated end-journal type, Fixed side end-journal can be set larger than nominal diameter of Screw Shaft, so there is no need to use Collar by press fit.
- Fixed side End-journal profile and dimension are standardized, so KSS Compact Support-Unit can be installed.
- Since supported-side end-journal is unfinished, it is possible to do additional end machining with your requested thread length.
- Special end-journal profile can be available as customized order.
- Whole threaded type is a high cost performance type and end-journal machining is available in accordance with your request.
- The Axial play is set at 5um or less, but Zero backlash is possible based on your request.

●Variation

We have 2 types of Precision Rolled Ball Screws, which are Integrated type with larger journal(PSRT) and whole threaded length type(PSR).

[Integrated journal type]

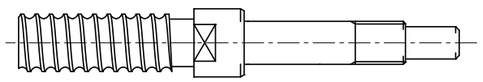

[whole threaded type]

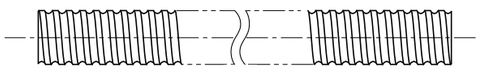

●Combination of Shaft nominal dia. & Lead

Unit：mm

Shaft dia. \ Lead	1	2	12
4	A323　A325 A324　A326		
6	A327　A329 A328　A330		
8	A331　A333 A332　A334	A335　A337 A336　A338	A339 A340
10		A341 A342	
12		A343 A344	

Note 1)The numbers in a table：showing a page in this catalogue

●Accuracy Grade & Axial play

The grade of PSR/PSRT series(Standardized Precision Rolled Ball Screws) is C5(JIS B 1192-3).
Axial play of this series is 0.005mm or less, but zero backlash(pre-load) type is available by your request.

●Material & Surface hardness

The material and hardness of PSR/PSRT series
(Standardized Precision Rolled Ball Screws) are as follows.

Products	Material of thread area	Heat treatment	Surface hardness
Precision Rolled Ball Screws (PSR series)	Shaft：S55C	Induction hardening	HRC58 or more
	Nut：SCM415	Carburizing and Quenching	
Precision Rolled Ball Screws with Integrated end-journal (PSRT series)	Shaft：S55C	Induction hardening	HRC58 or more
	Nut：SCM415	Carburizing and Quenching	

●Lubrication

Standardized Precision Rolled Ball Screws whole threaded length type(PSR Series) will be supplied with anti-rust oil.This oil is not lubricant, when Ball Screw operates, lubricant should be applied.
If there is no specific instruction, KSS would recommend our original grease(MSG No.2) as standard lubricant.
Please feel free to contact us.

●Others

PSR/PSRT series(Standardized Precision Rolled Ball Screws) provide 3 types of Ball Nut profile.
Return-plate style and End-cap style are our standard. In addition Internal-Deflector style as Compact Ball Nut is also in stock. So you can pick one of them based on your design.

●Model number notation

【Integrated journal type】

In case of PSRT type(Integrated journal type), please designate length, end-journal profile, lubricant and Nut direction according to the Model number notation below.

PSRT 08 01 K — 155 R 204 C5 B 0 X

① ② ③ ④ ⑤ ⑥ ⑦ ⑧ ⑨ ⑩ ⑪

①Precision Rolled Ball Screws Series No.
PSRT : Integrated journal type
②Screw Shaft nominal diameter(mm)
③Lead(mm)
④Ball Nut type
None : Standard
K : Compact type
⑤Screw thread length(mm)
(Specify in 1mm unit after end-journal machining)
⑥Thread direction(R=Right-hand)
⑦Screw Shaft total length(mm)
(Specify in 1mm unit)
⑧Accuracy grade(JIS C5)
⑨Shaft end-journal profile
Refer to Fig. A-26 below : A-type,B-type,C-type, D-type(Othes)
⑩Anti-rust oil or Lubricant
0 : KSS grease(MSG No.2)
1 : Anti-rust oil(Non Ruster PZ2)
2 : Multemp PS2 grease
3 : Other
⑪Nut Flange direction(Refer to Fig. A-27 below)

Fig. A-26 : Shaft end-journal profile

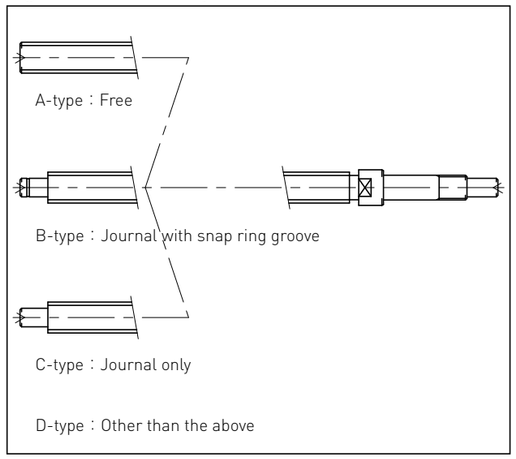

Fig. A-27 : Nut Flange direction

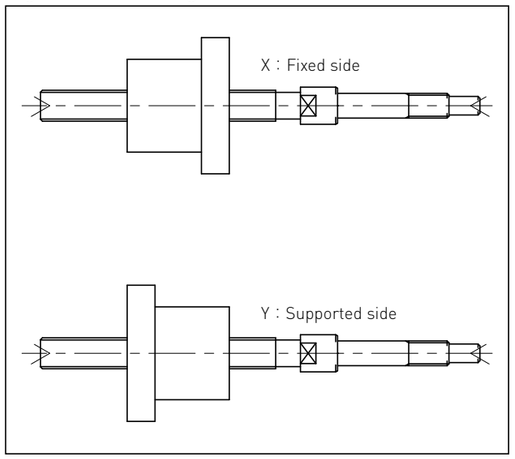

●Note

1)The detail of end-journal dimension for each size is shown from next page.
2)KSS does not make additional Nut machining.
3)The specification is subject to change without notice.
4)If the other configuration except (A,B,C)is requested, please contact KSS.
5)KSS will not be responsible for quality, in case re-work is done by other than KSS.

【Whole threaded type】

Model number notation of PSR type(whole threaded type) is as follows. Please designate end-journal profile with your simple sketch.

PSR 08 01 K — 230 R 230 C5

① ② ③ ④ ⑤ ⑥ ⑦ ⑧

①Precision Rolled Ball Screws Series No.
PSR : Whole threaded type
②Screw Shaft nominal diameter(mm)
③Lead(mm)
④Ball Nut type
None : Standard
K : Compact type
⑤Screw thread length(mm)
(Specify in 1mm unit after end-journal machining)
⑥Thread direction(R=Right-hand)
⑦Screw Shaft total length(mm)
(Specify in 1mm unit)
⑧Accuracy grade(Class JIS C5)

●Customized Design

It will be the customized if you need special specifications like below, please ask KSS representative.
1) Non-standard profile or dimension on Shaft end-journal.
2) Non-standard profile or dimension on Ball Nut or Flange.
3) Zero backlash (Pre-loaded) type Ball Screw.
4) Longer length of Ball Screw Shaft than standard product.

●Note

1)Zero backlash is possible by your request, please ask KSS representative.
2)We recommend additional end-journal machining is done by KSS. We do not guarantee accuracy after re-works done by other than KSS.
3)Please send us drawing with end-journal profile when you request end-journal maching.
4)Additional machining is not applied to the Nut.
Please design flange configuration according to our standard dimension.
5)In Ball Screws use, lubricant should be applied on them. Please note that anti-rust oil is not lubricant.

Standard products in stock PSR series

PSR0401 | Shaft dia. ϕ4 Lead 1mm | C5

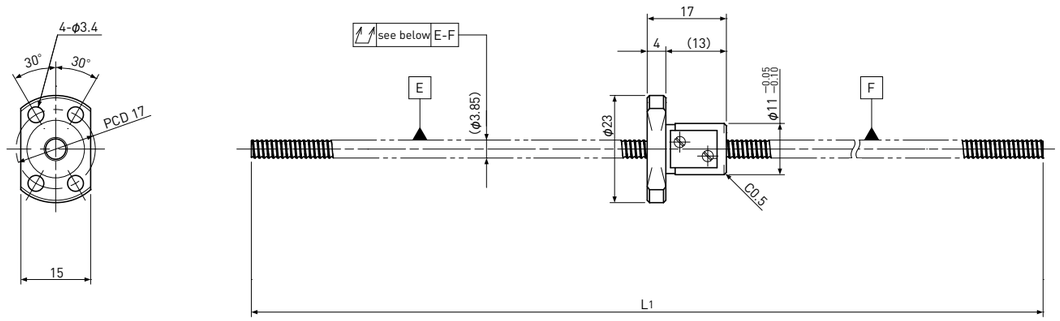

Unit:mm

Ball Screw Specifications		
Ball size		ϕ0.8
Number of thread		1
Thread direction		Right
Shaft root dia.		ϕ3.3
Number of circuit		3.7×1
Material	Shaft	S55C
	Nut	SCM415H
Surface hardness		HRC58～ (Thread area)
Anti-rust treatment		Anti-rust oil

Unit:mm

Ball Screw Model	Travel	Shaft length	Travel deviation e_p	Total Run-out	Axial play	Basic Load Rating N	
		L_1				Dynamic Ca	Static Coa
PSR0401-100R100C5	75	100	±0.018	0.035	～0.005	560	790

Note) Please dsignate end-journal profile with your sketch.

Standard products in stock PSRT series

PSRT0401 | Shaft dia. ϕ4 Lead 1mm | C5

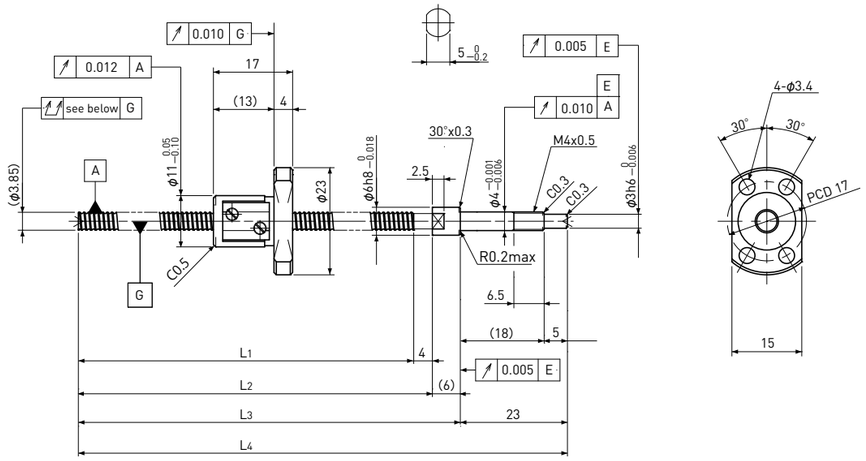

Unit:mm

Ball Screw Specifications		
Ball size		ϕ0.8
Number of thread		1
Thread direction		Right
Shaft root dia.		ϕ3.3
Number of circuit		3.7×1
Material	Shaft	S55C+SUS303
	Nut	SCM415H
Surface hardness		HRC58～ (Thread area)
Lubrication		KSS Original Grease MSG No.2

Supported-side end-journal profile

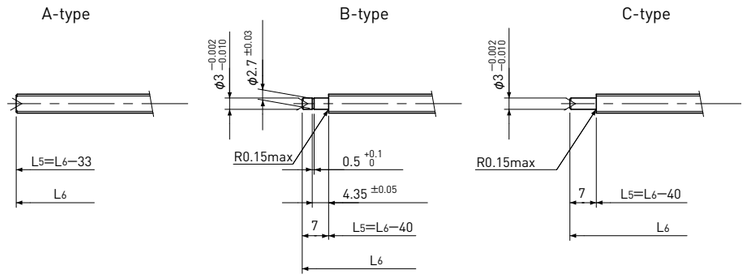

L_5: Thread length after end-journal machining.
L_6: Total length after end-journal machining.

Support-unit Recommendation			
	Supported-side	:	MSU-4CS/4GS
	Fixed-side	:	MSU-4C/4G

D-type : Other than the above.

Unit:mm

Ball Screw Model	Travel	Shaft length				Travel deviation e_p	Total Run-out	Axial play	Basic Load Rating N	
		L_1	L_2	L_3	L_4				Dynamic Ca	Static Coa
PSRT0401-72R105C5	50	72	76	82	105	±0.018	0.035	～0.005	560	790

Note) Please refer to page A321 for order code of end-journal machining.

Standard products in stock PSR series

PSR0401K | Compact Nut Shaft dia. ϕ4 Lead 1mm | C5

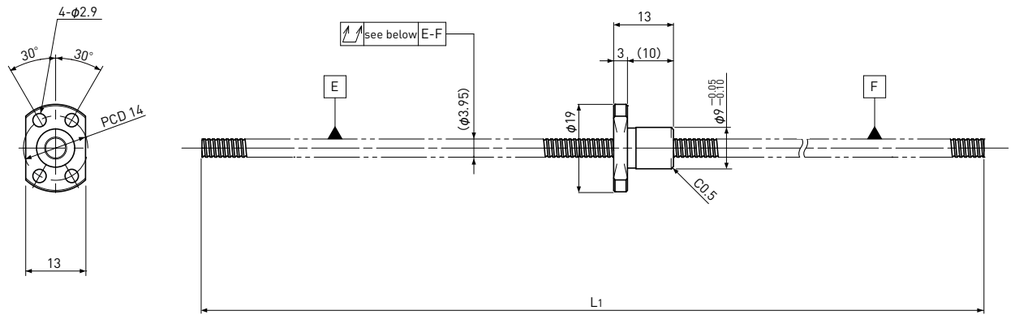

Unit:mm

Ball Screw Specifications		
Ball size		ϕ0.6
Number of thread		1
Thread direction		Right
Shaft root dia.		ϕ3.4
Number of circuit		1×3
Material	Shaft	S55C
	Nut	SCM415H
Surface hardness		HRC58～ (Thread area)
Anti-rust treatment		Anti-rust oil

Unit:mm

Ball Screw Model	Travel	Shaft length	Travel deviation e_p	Total Run-out	Axial play	Basic Load Rating N	
		L_1				Dynamic Ca	Static Coa
PSR0401K-100R100C5	80	100	±0.018	0.035	～0.005	300	430

Note) Please dsignate end-journal profile with your sketch.

Standard products in stock PSRT series

PSRT0401K | Compact Nut Shaft dia. ϕ4 Lead 1mm | C5

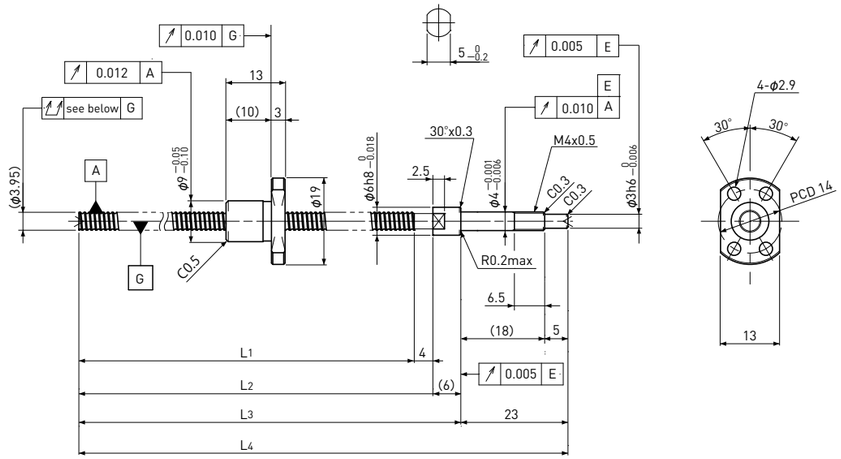

Unit:mm

Ball Screw Specifications		
Ball size		ϕ0.6
Number of thread		1
Thread direction		Right
Shaft root dia.		ϕ3.4
Number of circuit		1×3
Material	Shaft	S55C+SUS303
	Nut	SCM415H
Surface hardness		HRC58～ (Thread area)
Lubrication		KSS Original Grease MSG No.2

Supported-side end-journal profile

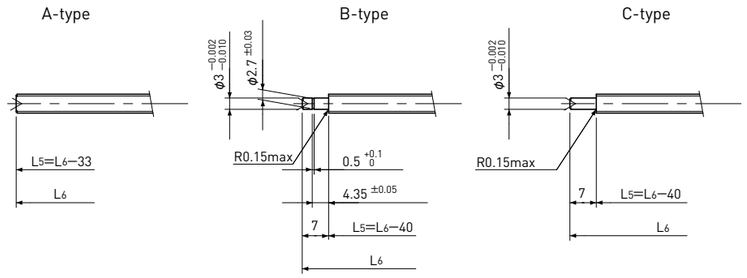

L_5: Thread length after end-journal machining.
L_6: Total length after end-journal machining.

Support-unit Recommendation			
	Supported-side	:	MSU-4CS/4GS
	Fixed-side	:	MSU-4C/4G

D-type : Other than the above.

Unit:mm

Ball Screw Model	Travel	Shaft length				Travel deviation e_p	Total Run-out	Axial play	Basic Load Rating N	
		L_1	L_2	L_3	L_4				Dynamic Ca	Static Coa
PSRT0401K-72R105C5	50	72	76	82	105	±0.018	0.035	～0.005	300	430

Note) Please refer to page A321 for order code of end-journal machining.

Standard products in stock PSR series

PSR0601 | Shaft dia. $\phi 6$ Lead 1mm | C5

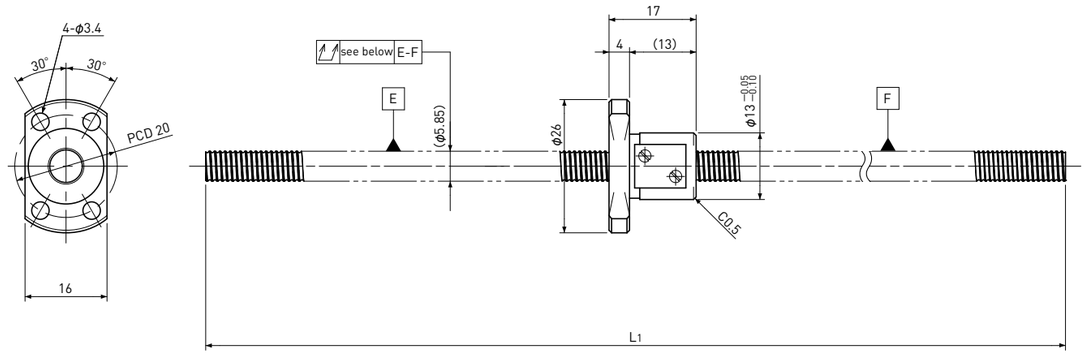

Unit:mm

Ball Screw Specifications		
Ball size		ϕ0.8
Number of thread		1
Thread direction		Right
Shaft root dia.		ϕ5.3
Number of circuit		3.7×1
Material	Shaft	S55C
	Nut	SCM415H
Surface hardness		HRC58～ (Thread area)
Anti-rust treatment		Anti-rust oil

Unit:mm

Ball Screw Model	Travel	Shaft length	Travel deviation e_p	Total Run-out	Axial play	Basic Load Rating N	
		L_1				Dynamic Ca	Static Coa
PSR0601-200R200C5	175	200	±0.020	0.050	～0.005	680	1200

Note) Please dsignate end-journal profile with your sketch.

Standard products in stock PSRT series

PSRT0601 | Shaft dia. $\phi 6$ Lead 1mm | C5

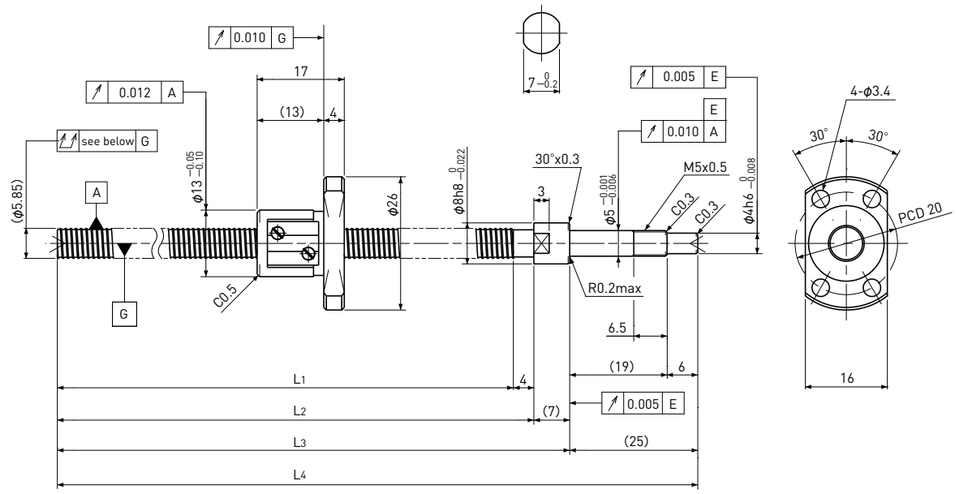

Unit:mm

Ball Screw Specifications		
Ball size		ϕ0.8
Number of thread		1
Thread direction		Right
Shaft root dia.		ϕ5.3
Number of circuit		3.7×1
Material	Shaft	S55C+SUS303
	Nut	SCM415H
Surface hardness		HRC58～ (Thread area)
Lubrication		KSS Original Grease MSG No.2

Supported-side end-journal profile

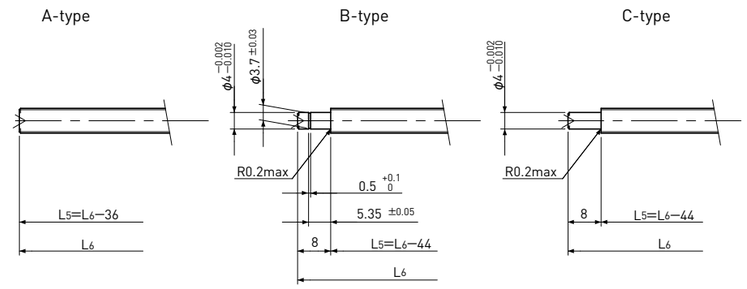

L_5: Thread length after end-journal machining.
L_6: Total length after end-journal machining.

Support-unit Recommendation			
	Supported-side	:	MSU-5CS/5GS
	Fixed-side	:	MSU-5C/5G

D-type : Other than the above.

Unit:mm

Ball Screw Model	Travel	Shaft length				Travel deviation e_p	Total Run-out	Axial play	Basic Load Rating N	
		L_1	L_2	L_3	L_4				Dynamic Ca	Static Coa
PSRT0601-89R125C5	65	89	93	100	125	±0.018	0.035	～0.005	680	1200

Note) Please refer to page A321 for order code of end-journal machining.

Standard products in stock PSR series

PSR0601K | Compact Nut Shaft dia. ϕ6 Lead 1mm | C5

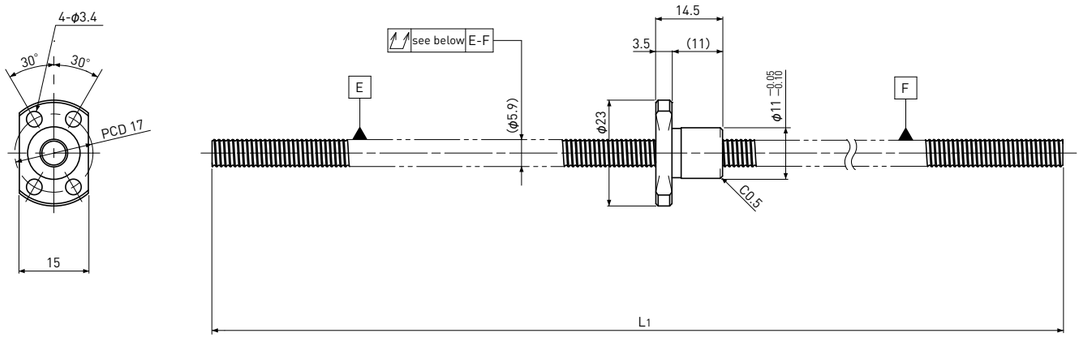

Unit:mm

Ball Screw Specifications		
Ball size		ϕ0.8
Number of thread		1
Thread direction		Right
Shaft root dia.		ϕ5.3
Number of circuit		1×3
Material	Shaft	S55C
	Nut	SCM415H
Surface hardness		HRC58～ (Thread area)
Anti-rust treatment		Anti-rust oil

Unit:mm

Ball Screw Model	Travel	Shaft length	Travel deviation e_p	Total Run-out	Axial play	Basic Load Rating N	
		L_1				Dynamic Ca	Static Coa
PSR0601K-200R2000C5	180	200	±0.020	0.050	～0.005	560	950

Note) Please dsignate end-journal profile with your sketch.

Standard products in stock PSRT series

PSRT0601K | Compact Nut Shaft dia. ϕ6 Lead 1mm | C5

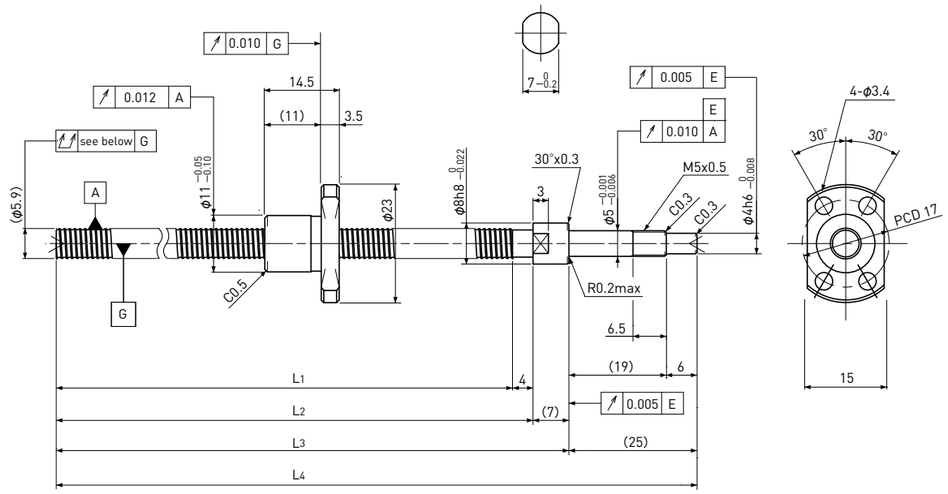

Unit:mm

Ball Screw Specifications		
Ball size		ϕ0.8
Number of thread		1
Thread direction		Right
Shaft root dia.		ϕ5.3
Number of circuit		1×3
Material	Shaft	S55C+SUS303
	Nut	SCM415H
Surface hardness		HRC58～ (Thread area)
Lubrication		KSS Original Grease MSG No.2

Supported-side end-journal profile

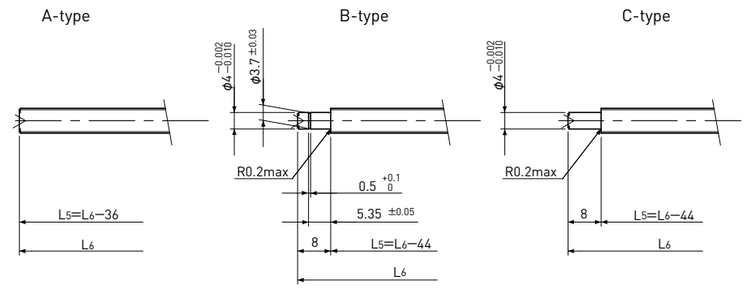

L_5: Thread length after end-journal machining.
L_6: Total length after end-journal machining.

Support-unit Recommendation			
	Supported-side	:	MSU-5CS/5GS
	Fixed-side	:	MSU-5C/5G

D-type : Other than the above.

Unit:mm

Ball Screw Model	Travel	Shaft length				Travel deviation e_p	Total Run-out	Axial play	Basic Load Rating N	
		L_1	L_2	L_3	L_4				Dynamic Ca	Static Coa
PSRT0601K-89R125C5	65	89	93	100	125	±0.018	0.035	～0.005	560	950

Note) Please refer to page A321 for order code of end-journal machining.

Standard products in stock PSR series

PSR0801 | Shaft dia. ϕ8 Lead 1mm | C5

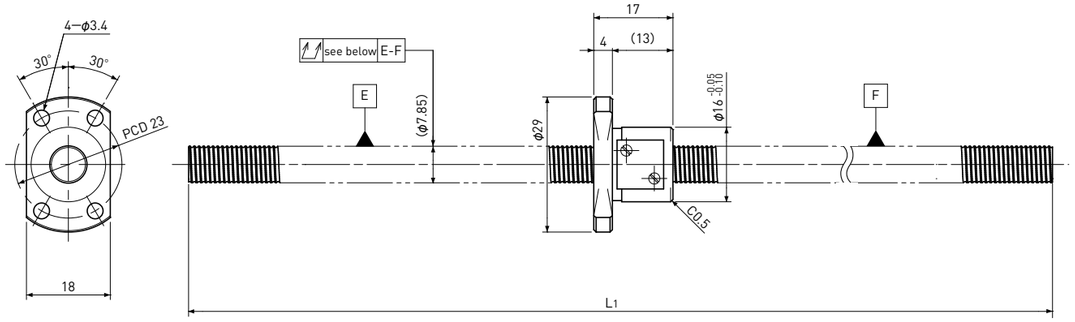

Unit:mm

Ball Screw Specifications		
Ball size		ϕ0.8
Number of thread		1
Thread direction		Right
Shaft root dia.		ϕ7.3
Number of circuit		3.7×1
Material	Shaft	S55C
	Nut	SCM415H
Surface hardness		HRC58～ (Thread area)
Anti-rust treatment		Anti-rust oil

Unit:mm

Ball Screw Model	Travel	Shaft length	Travel deviation e_p	Total Run-out	Axial play	Basic Load Rating N	
		L_1				Dynamic Ca	Static Coa
PSR0801-230R230C5	205	230	±0.023	0.065	～0.005	780	1650

Note) Please dsignate end-journal profile with your sketch.

Standard products in stock PSRT series

PSRT0801 | Shaft dia. ϕ8 Lead 1mm | C5

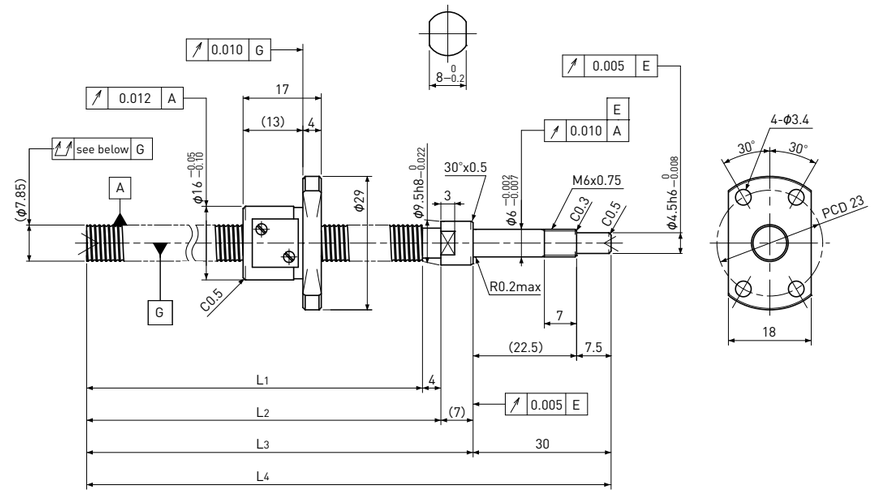

Unit:mm

Ball Screw Specifications		
Ball size		ϕ0.8
Number of thread		1
Thread direction		Right
Shaft root dia.		ϕ7.3
Number of circuit		3.7×1
Material	Shaft	S55C+SUS303
	Nut	SCM415H
Surface hardness		HRC58～ (Thread area)
Lubrication		KSS Original Grease MSG No.2

Supported-side end-journal profile

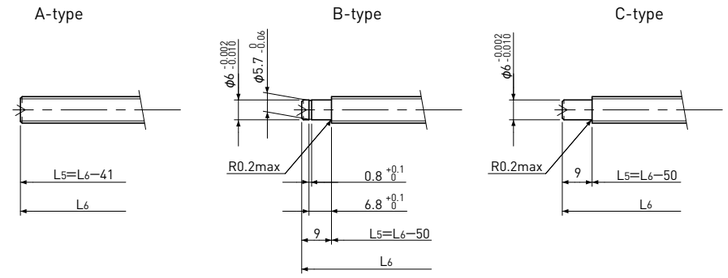

L_5: Thread length after end-journal machining.
L_6: Total length after end-journal machining.

Support-unit Recommendation			
	Supported-side	:	MSU-6CS/6GS
	Fixed-side	:	MSU-6C/6G

D-type : Other than the above

Unit:mm

Ball Screw Model	Travel	Shaft length				Travel deviation e_p	Total Run-out	Axial play	Basic Load Rating N	
		L_1	L_2	L_3	L_4				Dynamic Ca	Static Coa
PSRT0801-169R210C5	145	169	173	180	210	±0.020	0.065	～0.005	780	1650

Note) Please refer to page A321 for order code of end-journal machining.

Standard products in stock PSR series

PSR0801K | Compact Nut Shaft dia.φ8 Lead 1mm | C5

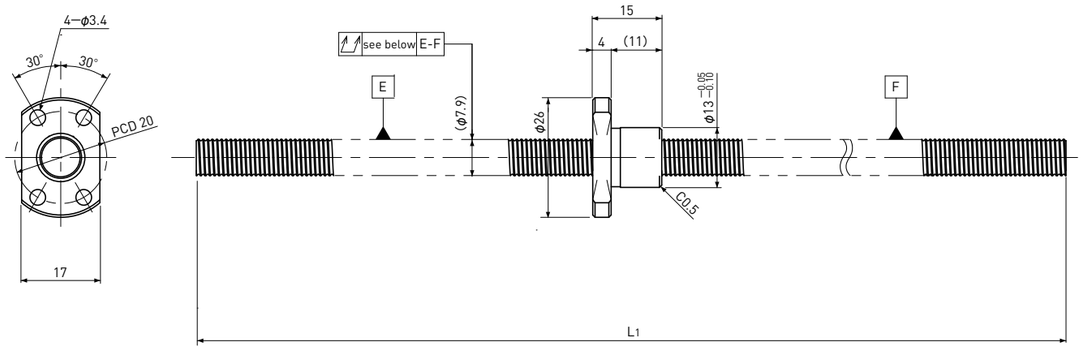

Unit:mm

Ball Screw Specifications		
Ball size		φ0.8
Number of thread		1
Thread direction		Right
Shaft root dia.		φ7.3
Number of circuit		1×3
Material	Shaft	S55C
	Nut	SCM415H
Surface hardness		HRC58～ (Thread area)
Anti-rust treatment		Anti-rust oil

Unit:mm

Ball Screw Model	Travel	Shaft length	Travel deviation e_p	Total Run-out	Axial play	Basic Load Rating N	
		L_1				Dynamic Ca	Static Coa
PSR0801K-230R230C5	210	230	±0.023	0.065	～0.005	650	1300

Note) Please dsignate end-journal profile with your sketch.

Standard products in stock PSRT series

PSRT0801K | Compact Nut Shaft dia.φ8 Lead 1mm | C5

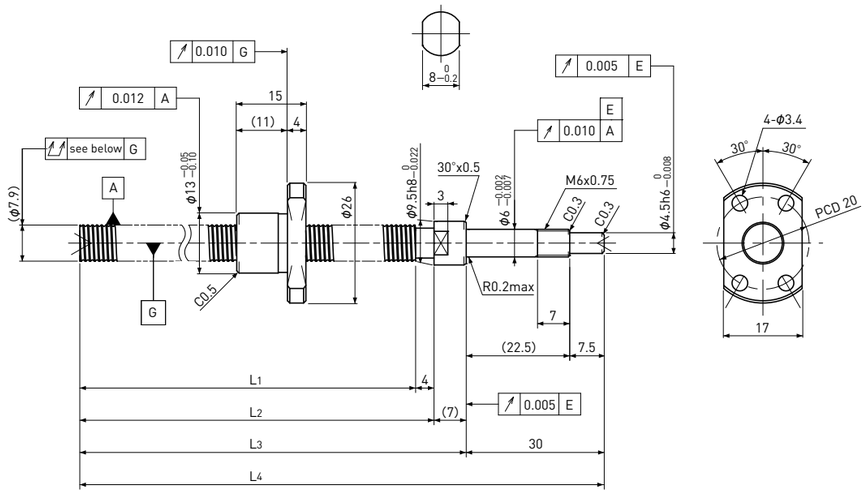

Unit:mm

Ball Screw Specifications		
Ball size		φ0.8
Number of thread		1
Thread direction		Right
Shaft root dia.		φ7.3
Number of circuit		1×3
Material	Shaft	S55C+SUS303
	Nut	SCM415H
Surface hardness		HRC58～ (Thread area)
Lubrication		KSS Original Grease MSG No.2

Supported-side end-journal profile

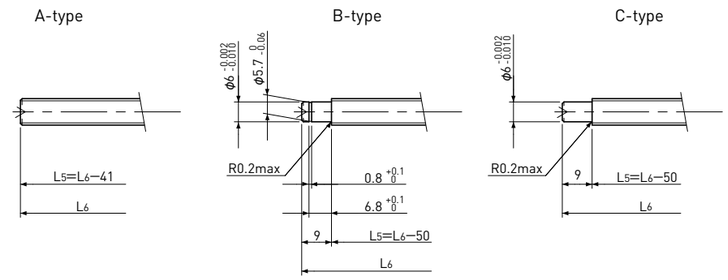

L_5:Thread length after end-journal machining.
L_6:Total length after end-journal machining.

Support-unit Recommendation			
	Supported-side	:	MSU-6CS/6GS
	Fixed-side	:	MSU-6C/6G

D-type : Other than the above

Unit:mm

Ball Screw Model	Travel	Shaft length				Travel deviation e_p	Total Run-out	Axial play	Basic Load Rating N	
		L_1	L_2	L_3	L_4				Dynamic Ca	Static Coa
PSRT0801K-169R210C5	145	169	173	180	210	±0.020	0.065	～0.005	650	1300

Note) Please refer to page A321 for order code of end-journal machining.

Standard products in stock PSR series

PSR0802 | Shaft dia. φ8 Lead 2mm | C5

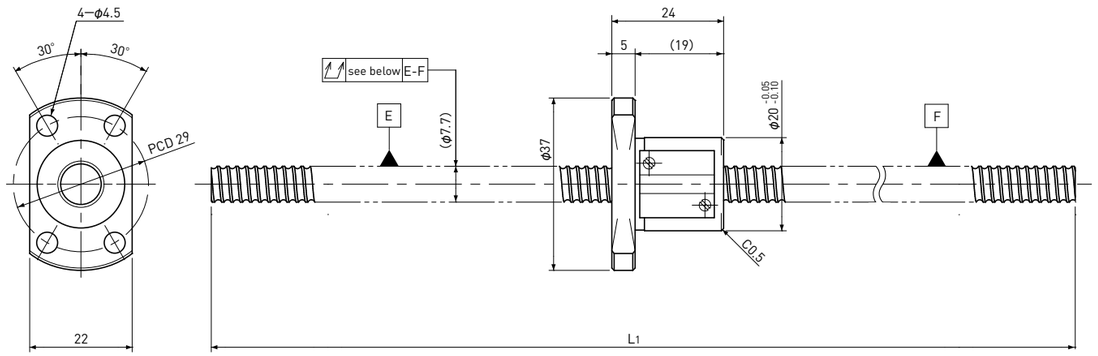

Unit:mm

Ball Screw Specifications		
Ball size		φ1.5875
Number of thread		1
Thread direction		Right
Shaft root dia.		φ6.6
Number of circuit		3.7×1
Material	Shaft	S55C
	Nut	SCM415H
Surface hardness		HRC58～ (Thread area)
Anti-rust treatment		Anti-rust oil

Unit:mm

Ball Screw Model	Travel	Shaft length	Travel deviation e_p	Total Run-out	Axial play	Basic Load Rating N	
		L_1				Dynamic Ca	Static Coa
PSR0802-230R230C5	200	230	±0.023	0.065	～0.005	2400	4100

Note) Please dsignate end-journal profile with your sketch.

Standard products in stock PSRT series

PSRT0802 | Shaft dia. φ8 Lead 2mm | C5

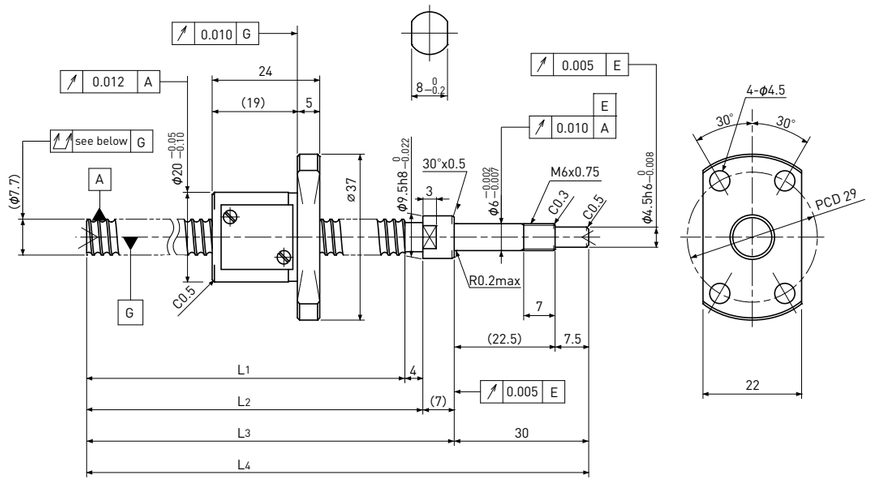

Unit:mm

Ball Screw Specifications		
Ball size		φ1.5875
Number of thread		1
Thread direction		Right
Shaft root dia.		φ6.6
Number of circuit		3.7×1
Material	Shaft	S55C+SUS303
	Nut	SCM415H
Surface hardness		HRC58～ (Thread area)
Lubrication		KSS Original Grease MSG No.2

Supported-side end-journal profile

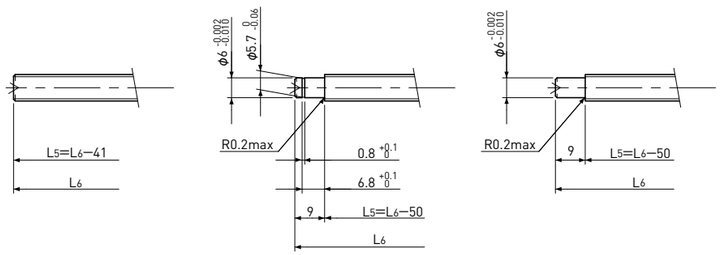

L_5: Thread length after end-journal machining.
L_6: Total length after end-journal machining.

Support-unit Recommendation			
	Supported-side	:	MSU-6CS/6GS
	Fixed-side	:	MSU-6C/6G

D-type : Other than the above

Unit:mm

Ball Screw Model	Travel	Shaft length				Travel deviation e_p	Total Run-out	Axial play	Basic Load Rating N	
		L_1	L_2	L_3	L_4				Dynamic Ca	Static Coa
PSRT0802-169R210C5	140	169	173	180	210	±0.020	0.065	～0.005	2400	4100

Note) Please refer to page A321 for order code of end-journal machining.

Standard products in stock PSR series

PSR0802K | Compact Nut | Shaft dia. ϕ8 Lead 2mm | C5

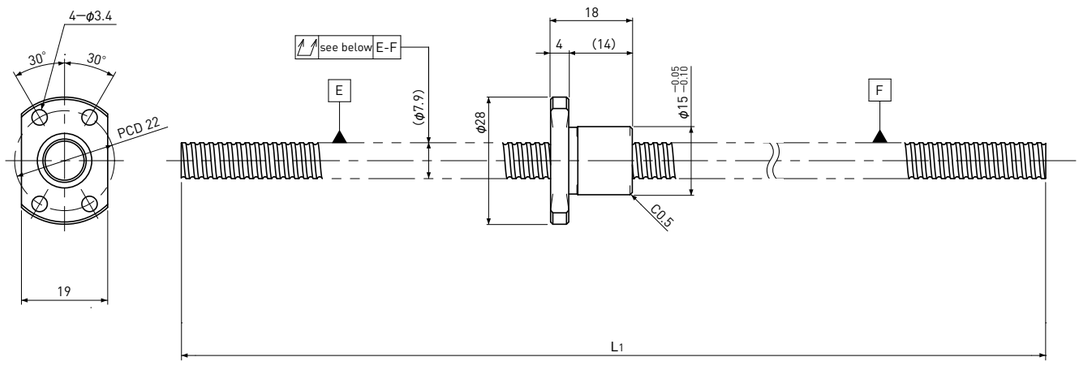

Unit:mm

Ball Screw Specifications		
Ball size		ϕ1.2
Number of thread		1
Thread direction		Right
Shaft root dia.		ϕ7.0
Number of circuit		1×3
Material	Shaft	S55C
	Nut	SCM415H
Surface hardness		HRC58～ (Thread area)
Anti-rust treatment		Anti-rust oil

Unit:mm

Ball Screw Model	Travel	Shaft length	Travel deviation e_p	Total Run-out	Axial play	Basic Load Rating N	
		L_1				Dynamic Ca	Static Coa
PSR0802K-230R230C5	205	230	±0.023	0.065	～0.005	1300	2300

Note) Please dsignate end-journal profile with your sketch.

Standard products in stock PSRT series

PSRT0802K | Compact Nut | Shaft dia. ϕ8 Lead 2mm | C5

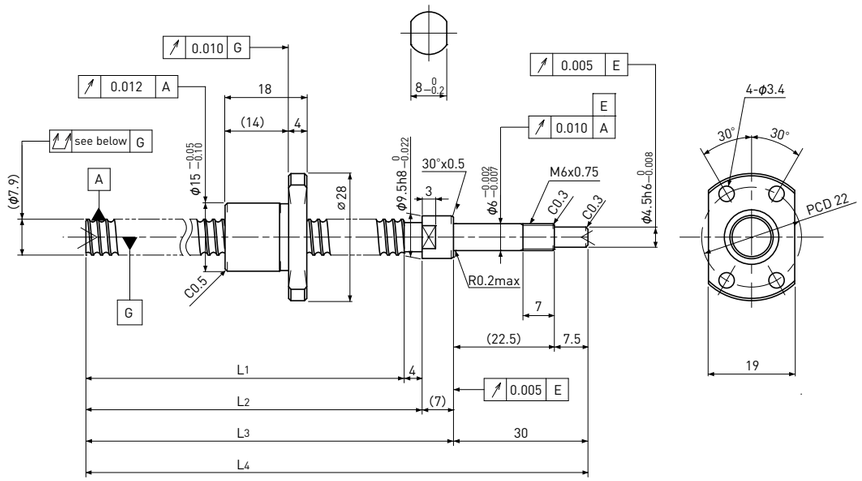

Unit:mm

Ball Screw Specifications		
Ball size		ϕ1.2
Number of thread		1
Thread direction		Right
Shaft root dia.		ϕ7.0
Number of circuit		1×3
Material	Shaft	S55C+SUS303
	Nut	SCM415H
Surface hardness		HRC58～ (Thread area)
Lubrication		KSS Original Grease MSG No.2

Supported-side end-journal profile

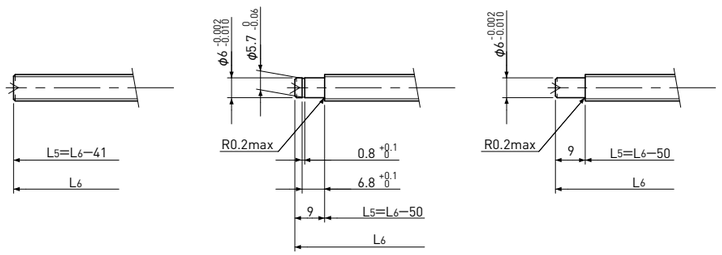

L_5: Thread length after end-journal machining.
L_6: Total length after end-journal machining.

Support-unit Recommendation			
	Supported-side	:	MSU-6CS/6GS
	Fixed-side	:	MSU-6C/6G

D-type : Other than the above

Unit:mm

Ball Screw Model	Travel	Shaft length				Travel deviation e_p	Total Run-out	Axial play	Basic Load Rating N	
		L_1	L_2	L_3	L_4				Dynamic Ca	Static Coa
PSRT0802K-169R210C5	145	169	173	180	210	±0.020	0.065	～0.005	1300	2300

Note) Please refer to page A321 for order code of end-journal machining.

Standard products in stock PSR series

PSR0812 | Shaft dia. ϕ8 Lead 12mm | C5

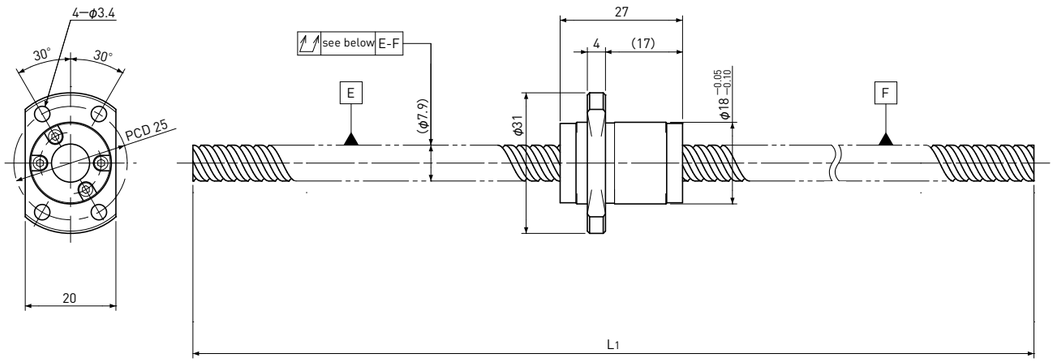

Unit:mm

Ball Screw Specifications		
Ball size		ϕ1.5875
Number of thread		2
Thread direction		Right
Shaft root dia.		ϕ6.7
Number of circuit		1.6×2
Material	Shaft	S55C
	Nut	SCM415H
Surface hardness		HRC58～ (Thread area)
Anti-rust treatment		Anti-rust oil

Unit:mm

Ball Screw Model	Travel	Shaft length	Travel deviation e_p	Total Run-out	Axial play	Basic Load Rating N	
		L_1				Dynamic Ca	Static Coa
PSR0812-230R230C5	195	230	±0.023	0.065	～0.005	2200	4000

Note) Please dsignate end-journal profile with your sketch.

Standard products in stock PSRT series

PSRT0812 | Shaft dia. ϕ8 Lead 12mm | C5

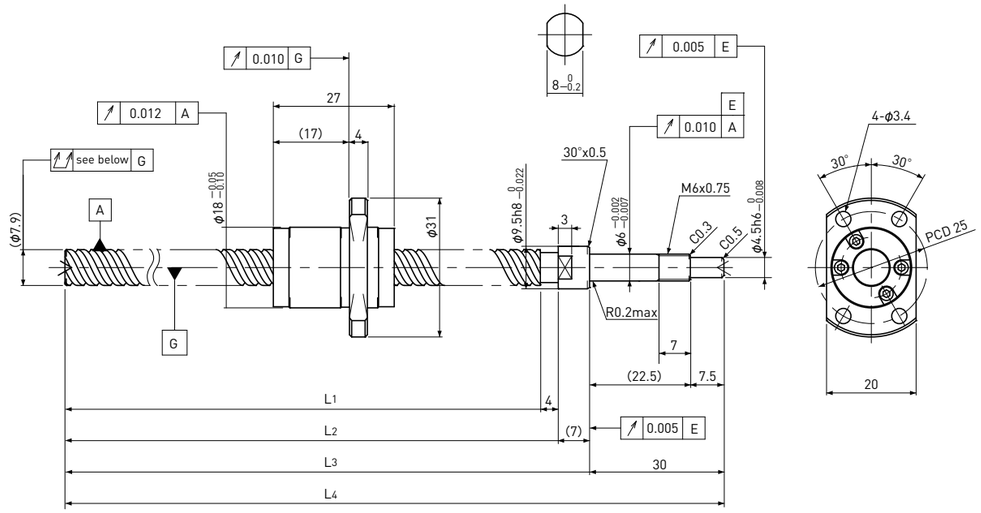

Unit:mm

Ball Screw Specifications		
Ball size		ϕ1.5875
Number of thread		2
Thread direction		Right
Shaft root dia.		ϕ6.7
Number of circuit		1.6×2
Material	Shaft	S55C+SUS303
	Nut	SCM415H
Surface hardness		HRC58～ (Thread area)
Lubrication		KSS Original Grease MSG No.2

Supported-side end-journal profile

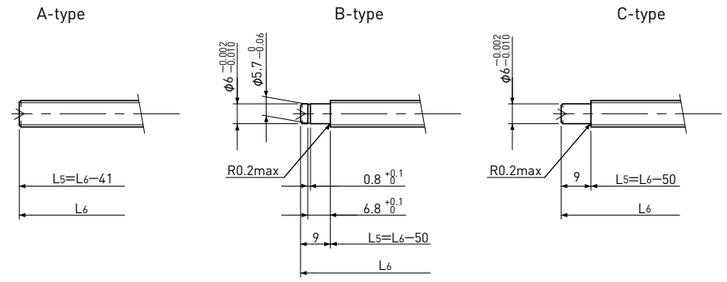

L_5: Thread length after end-journal machining.
L_6: Total length after end-journal machining.

Support-unit Recommendation			
	Supported-side	:	MSU-6CS/6GS
	Fixed-side	:	MSU-6C/6G

D-type : Other than the above.

Unit:mm

Ball Screw Model	Travel	Shaft length				Travel deviation e_p	Total Run-out	Axial play	Basic Load Rating N	
		L_1	L_2	L_3	L_4				Dynamic Ca	Static Coa
PSRT0812-169R210C5	135	169	173	180	210	±0.020	0.065	～0.005	2200	4000

Note) Please refer to page A321 for order code of end-journal machining.

Standard products in stock PSR series

PSR1002K | Compact Nut Shaft dia.φ10 Lead 2mm | C5

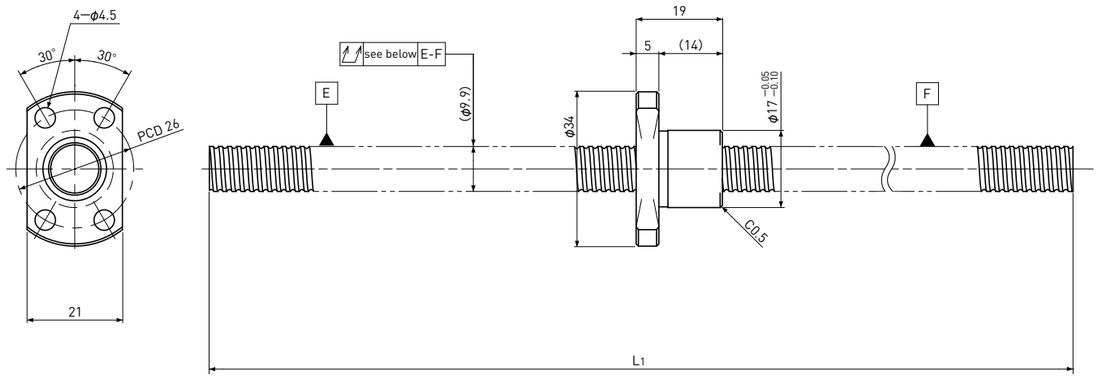

Unit:mm

Ball Screw Specifications		
Ball size		φ1.2
Number of thread		1
Thread direction		Right
Shaft root dia.		φ9.0
Number of circuit		1×3
Material	Shaft	S55C
	Nut	SCM415H
Surface hardness		HRC58～ (Thread area)
Anti-rust treatment		Anti-rust oil

Unit:mm

Ball Screw Model	Travel	Shaft length	Travel deviation e_p	Total Run-out	Axial play	Basic Load Rating N	
		L_1				Dynamic Ca	Static Coa
PSR1002K-230R230C5	205	230	±0.023	0.055	～0.005	1450	3000

Note) Please dsignate end-journal profile with your sketch.

Standard products in stock PSRT series

PSRT1002K | Compact Nut Shaft dia.φ10 Lead 2mm | C5

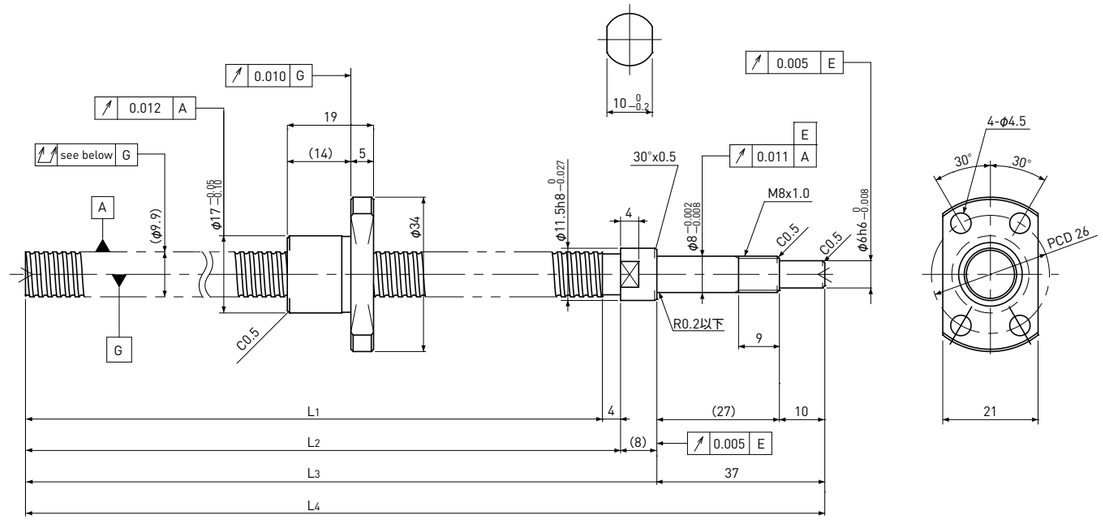

Unit:mm

Ball Screw Specifications		
Ball size		φ1.2
Number of thread		1
Thread direction		Right
Shaft root dia.		φ9.0
Number of circuit		1×3
Material	Shaft	S55C+SUS303
	Nut	SCM415H
Surface hardness		HRC58～ (Thread area)
Lubrication		KSS Original Grease MSG No.2

Supported-side end-journal profile

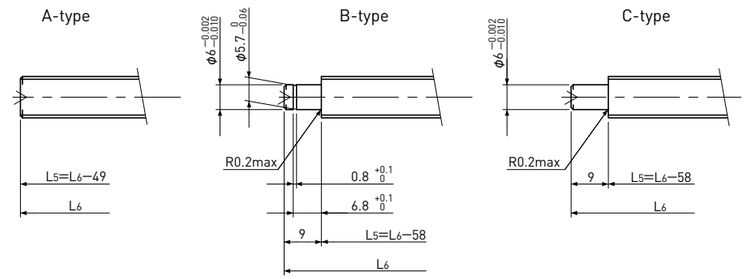

L_5:Thread length after end-journal machining.
L_6:Total length after end-journal machining.

Support-unit Recommendation			
	Supported-side	:	MSU-8CS/8GS
	Fixed-side	:	MSU-8C/8G

D-type : Other than the above.

Unit:mm

Ball Screw Model	Travel	Shaft length				Travel deviation e_p	Total Run-out	Axial play	Basic Load Rating N	
		L_1	L_2	L_3	L_4				Dynamic Ca	Static Coa
PSRT1002K-201R250C5	175	201	205	213	250	±0.023	0.055	～0.005	1450	3000

Note) Please refer to page A321 for order code of end-journal machining.

Standard products in stock PSR series

PSR1202K | Compact Nut Shaft dia.φ12 Lead 2mm | C5

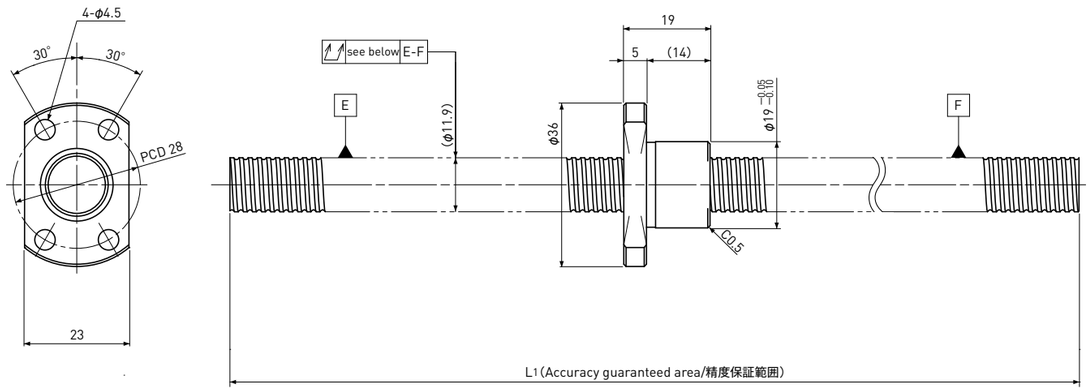

Unit : mm

Ball Screw Specifications		
Ball size		φ1.2
Number of thread		1
Thread direction		Right
Shaft root dia.		φ11.0
Number of circuit		1×3
Material	Shaft	S55C
	Nut	SCM415H
Surface hardness		HRC58～ (Thread area)
Anti-rust treatment		Anti-rust oil

Unit : mm

Ball Screw Model	Travel	Shaft length	Travel deviation e_p	Total Run-out	Axial play	Basic Load Rating N	
		L_1				Dynamic Ca	Static Coa
PSR1202K-280R280C5	255	280	±0.023	0.055	～0.005	1600	3700

Note) Please dsignate end-journal profile with your sketch.

Standard products in stock PSRT series

PSRT1202K | Compact Nut Shaft dia.φ12 Lead 2mm | C5

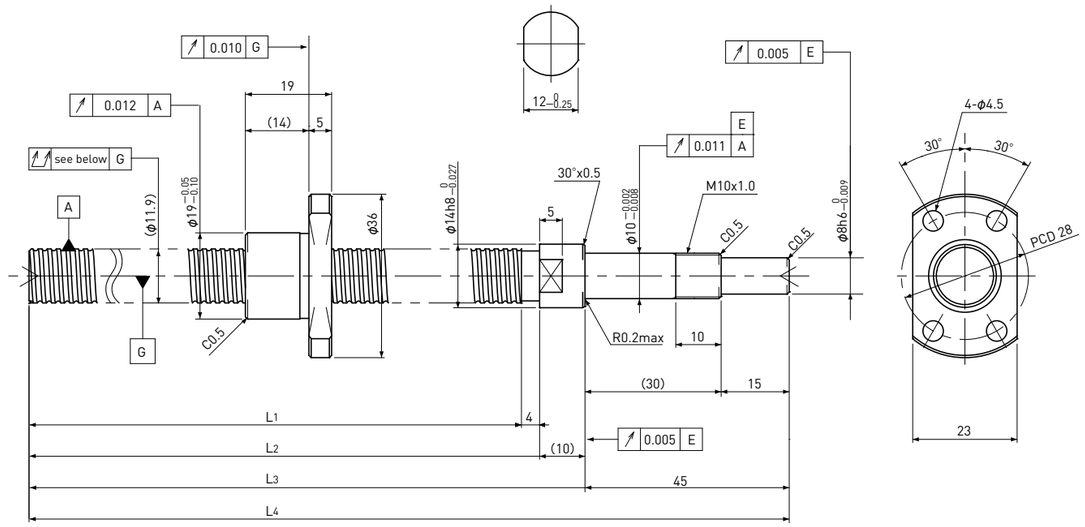

Unit : mm

Ball Screw Specifications		
Ball size		φ1.2
Number of thread		1
Thread direction		Right
Shaft root dia.		φ11.0
Number of circuit		1×3
Material	Shaft	S55C+SUS303
	Nut	SCM415H
Surface hardness		HRC58～ (Thread area)
Lubrication		KSS Original Grease MSG No.2

Supported-side end-journal profile

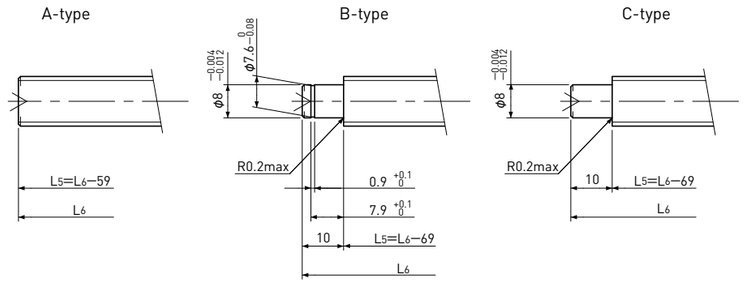

L_5 : Thread length after end-journal machining.
L_6 : Total length after end-journal machining.

Support-unit Recommendation			
	Supported-side	:	—
	Fixed-side	:	—

D-type : Other than the above.

Unit : mm

Ball Screw Model	Travel	Shaft length				Travel deviation e_p	Total Run-out	Axial play	Basic Load Rating N	
		L_1	L_2	L_3	L_4				Dynamic Ca	Static Coa
PSRT1202K-271R330C5	245	271	275	285	330	±0.023	0.065	～0.005	1600	3700

Note) Please refer to page A321 for order code of end-journal machining.